TUBU

Industrial and Agricultural LED Lighting Expert

2024-2025 CATALOGUE

TUBU COMPANY PROFILE

10 years
Lighting Industry Experience

50+
Self-owned Testing Equipments

50+
Patent Self-design Series

SHENZHEN TUBU TECH CO., LTD, is a professional ISO 9001 & ISO 14001 certified LED Lighting manufacturer located in Shenzhen, China. TUBU is engaged in the research and development of different types of led lights since 2014. We focus on the LED lightings, like led tri-proof light, led grow light, led farm light, led high bay light, led low bay light, led floodlight, and led street light, etc.

We have obtained CE, RoHS, ENEC, CB, D-MARK, ETL, DLC, FCC, IK10, IP69K certification for our products. All TUBU products are under strict product testing and quality control processes. We value customers and the quality at the most important place, and all our products provide 5 years warranty.

We have an experienced and professional sales team and engineers, we can respond to your questions and requirements very quickly, and offer some professional solutions according to your special application requirements. What's more, we can provide the Dialux simulation service for free. We accept OEM and ODM orders.

OUR TEAM

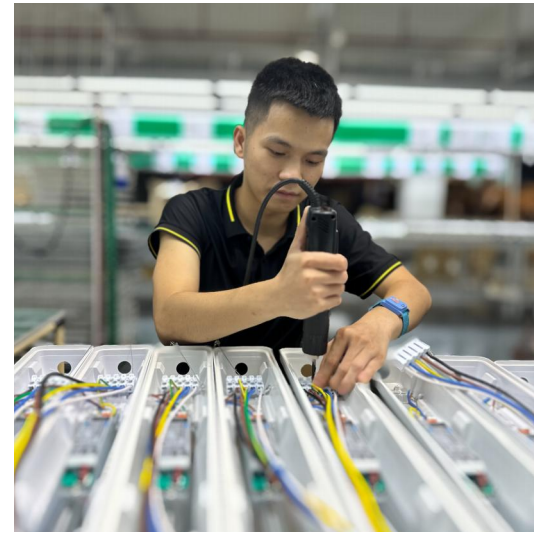

TUBU R & D ENGINEERING

Integrating Sphere

The integrating sphere can be used to test the luminous flux, color temperature, luminous efficiency and other parameters of the light source.

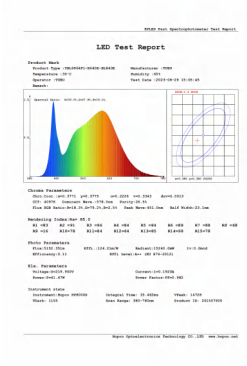

IES Photometric Test

The IES test refers to the light intensity distribution of the light source (or luminaire) in all directions of space. The curve formed by marking the luminous intensity values in each direction on the polar coordinate graph is the light distribution curve of the luminaire.

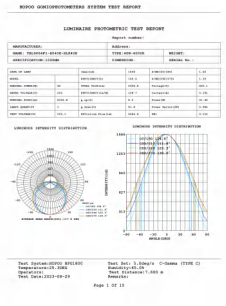

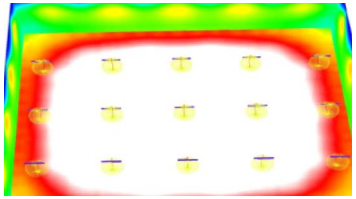

Light Distribution Design

Comfortable, professional and uniform light distribution helps customers gain more projects. TUBU provides customers with customized light distribution solutions.

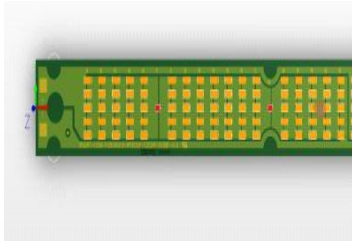

Electronic Design

Electronic components play a fundamental role in defining a luminaire's reliability and overall performance. TUBU has been using the most reliable drivers since entering the industry and with various intelligent controls, DALI/Motion sensors provides convenience for high efficiency and energy-saving and meets the requirements of sustainable development.

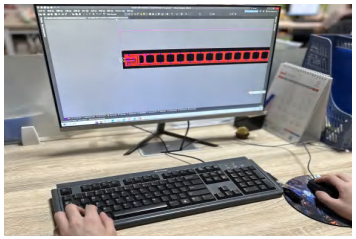

Product Design

The structure of the product will directly affect the performance. TUBU starts from the structure and fully considers the heat dissipation, IP, IK, installation, customization and other aspects of the product.

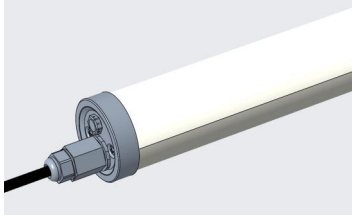

Appearance Design

Differentiation is the changing demand of the market. TUBU's aesthetic design in lighting gives the product not only an elegant appearance, but at the same time is suitable for a wide range of applications.

R&D TEST EQUIPMENTS

Photometric, Colorimetric & Electric Test System

Goniophotometer

Constant Temperature and Humidity Test Chamber

IP69K Water Spray Test Chamber

IP65 IP66 Water Spray Test Chamber

UV Accelerated Weathering Test Chamber

Electrothermal Constant Temperature Dring Oven

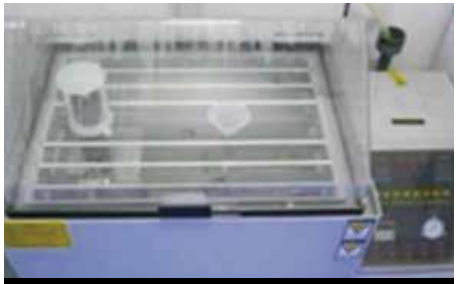

Salt Spray Chamber

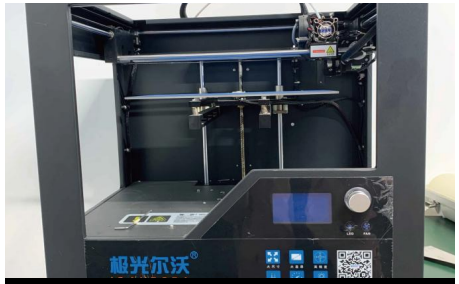

3D Printer

Multiplex Temperature Tester

AC Power Source

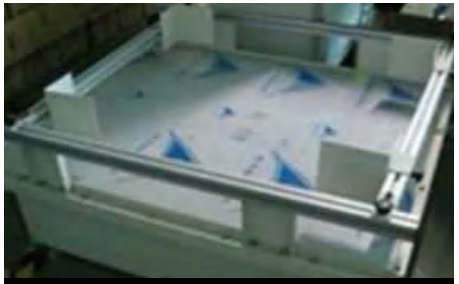

Transportation Vibration Simulator

TUBU

PRODUCT TEST BEFORE RELEASE

Various testing and verification before product release

- ☑ 3D Printing
- ☑ IPX5 / X6 / X7 test
- ☑ Thermal test
- ☑ Anti-corrosion test
- ☑ 3G vibration test
- ☑ Salt spray test
- ☑ Needle-flame
- ☑ Load test
- ☑ Cord anchorage test
- ☑ Drop test
- ☑ AC / DC power source
- ☑ Suspension test
- ☑ Draught-proof test
- ☑ Power meter
- ☑ Water-proof test
- ☑ Anti-UV test
- ☑ Oven
- ☑ Electronic load test
- ☑ Dust-proof test
- ☑ IES test
- ☑ Integrating sphere
- ☑ Glow-wire test
- ☑ Safety test
- ☑ Touch current test
- ☑ Lifespan test
- ☑ RoHS test
- ☑ Surge test
- ☑ Humidity test
- ☑ Wind resistance test
- ☑ Endurance test
- ☑ Aging test
- ☑ Electronic balance
- ☑ Oscilloscope
- ☑ Constant temperature
- ☑ Digital multimeter

QUALIFICATIONS AND CERTIFICATES

ISO-9001

ENEC

CB

ETL

CE

IK10

IP69K

DLG

SAA

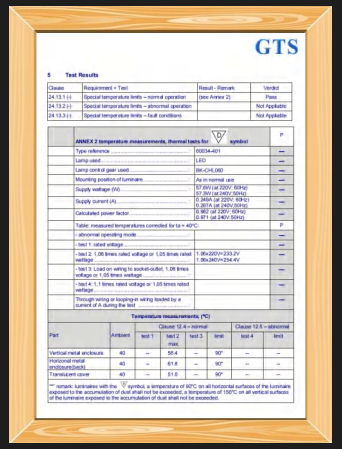

D-MARK

TUBU

CONTENTS

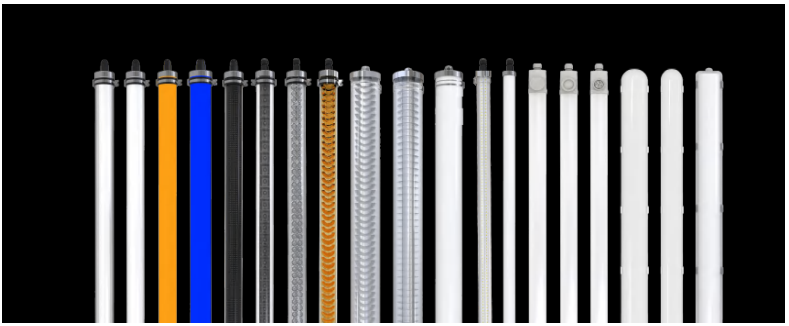

LED Tri-Proof Light

PAGE 09-54

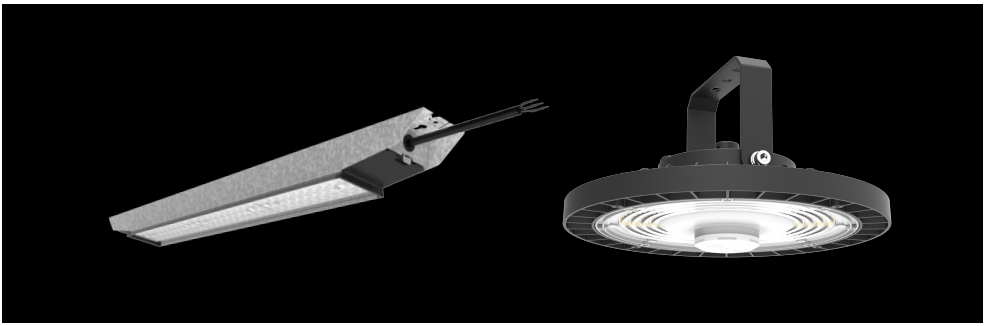

LED High Bay

PAGE 55-66

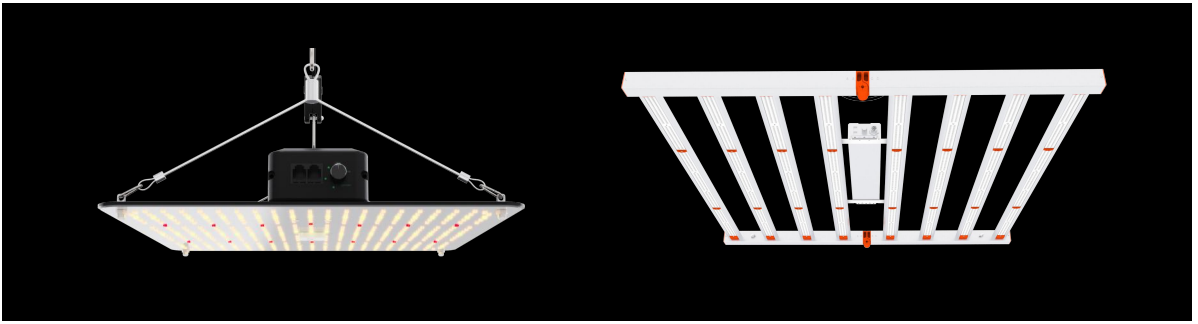

LED Grow Light

PAGE 67-72

LED Flood Light

PAGE 73-82

LED Marine Searchlight

PAGE 83-88

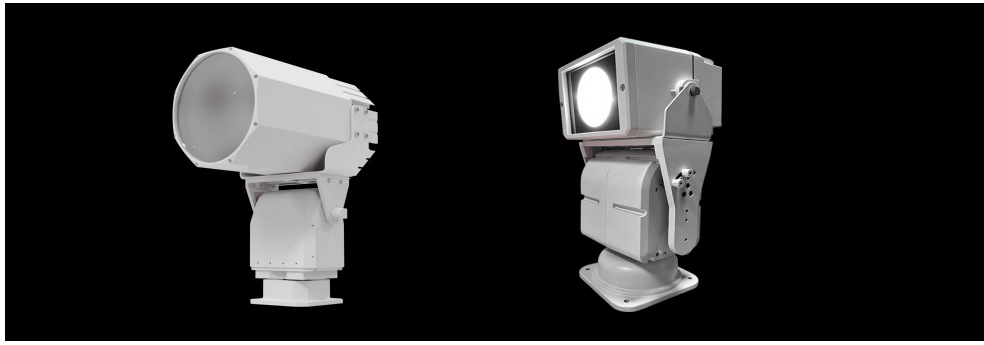

LED Street Light

PAGE 89-94

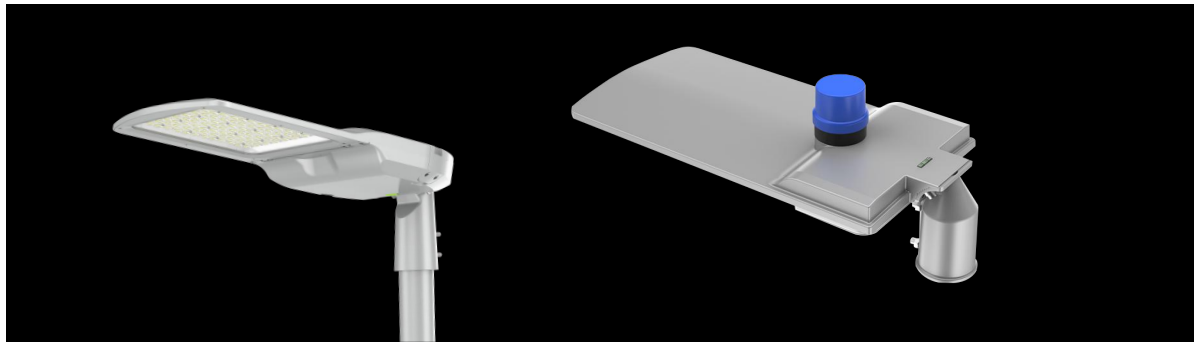

LED Tri-Proof Light

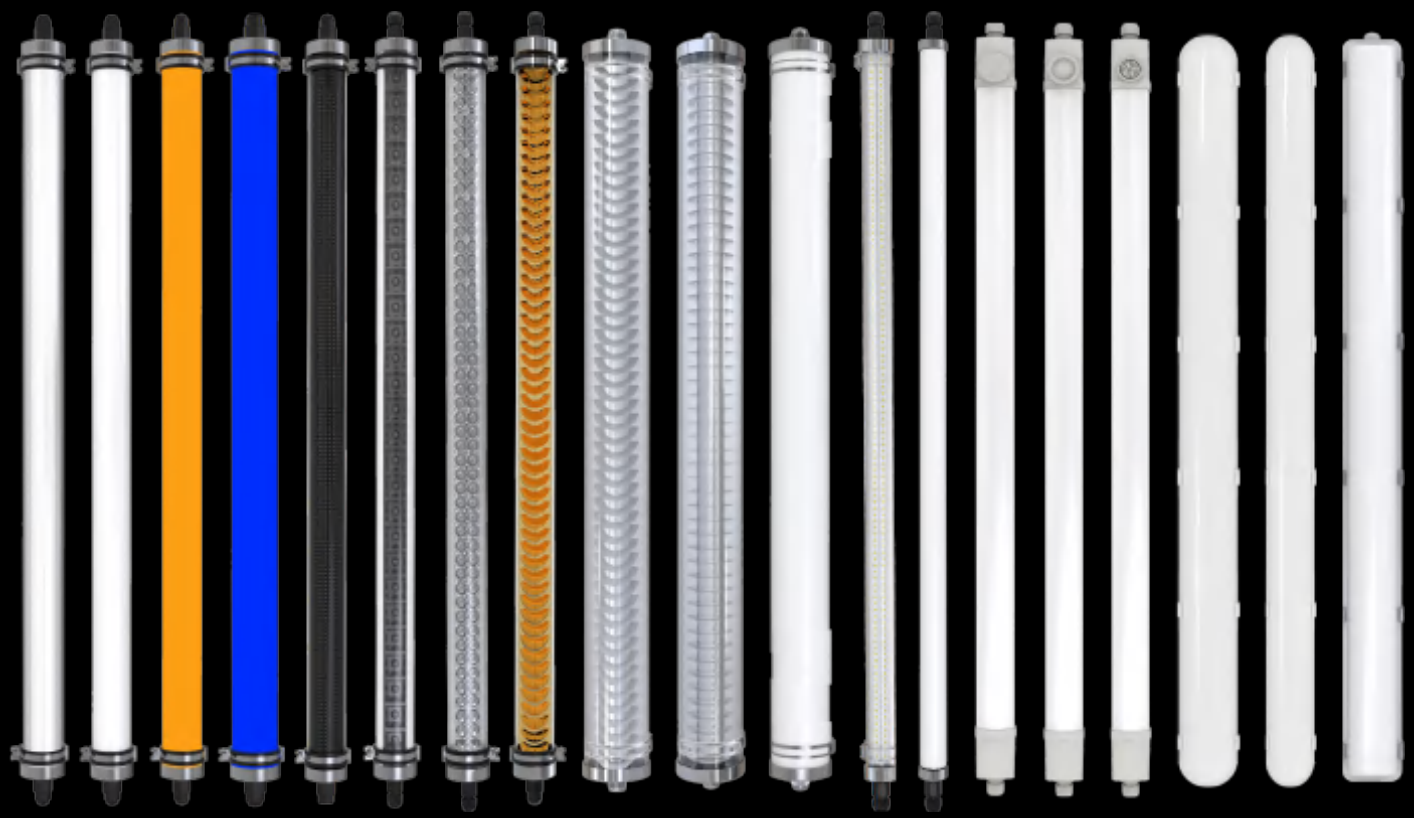

DLG LED Tri-proof Light L9
PAGE 11-12

Ø 47mm LED Tri-proof Light L9M
PAGE 13-14

LED Tri-proof Light 180° L9M
PAGE 15-16

Ø100mm LED Tri-proof Light L9P
PAGE 17-18

Ø100mm Grid Type LED Tubular Light
PAGE 19-20

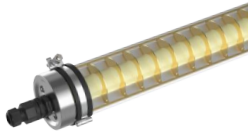
Grid Type LED Tubular Light
PAGE 21-22

UGR<16 LED Tubular Light
PAGE 23-24

UGR<19 IP69K Tri-proof Light
PAGE 25-26

Mesh Type LED Tubular Light
PAGE 27-28

High Borosilicate Glass LED Tri-Proof Light
PAGE 29-30

Tube Style LED Tubular Light
PAGE 31-32

Farm RW LED Tubular Light
PAGE 33-34

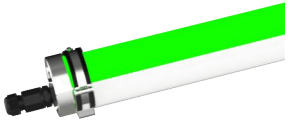
Farm RW LED Tubular Light
PAGE 35-36

Wine Cellar LED Tubular Light
PAGE 37-38

Easy Install LED Tri-proof Light L18
PAGE 39-40

LED Tri-proof Light L9-360°
PAGE 41-42

IP66 LED Batten Light L10-K Series
PAGE 43-44

IP65 LED Batten Fixture-O Series
PAGE 45-46

IP66 LED Batten Light L10-S Series Pro
PAGE 47-48

LED Tri-proof Light L10-G
PAGE 49-50

IP65 LED Batten Light L10-H1/L10-H2 Series
PAGE 51-52

Toolless LED Tri-proof Light L11
PAGE 53-54

LED Linear Low Bay Fixture L1
PAGE 55-56

TUBU

DLG LED Tri-proof Light L9

Features

- IP67 & IP69K & IK10
- PMMA IK08 / PC IK10
- Anti-ammonia
- Against water pressure of 100bar (1450psi) and temperature of 80℃
- System efficiency up to 140Lm/W & 170Lm/W
- High CRI>80
- Environmentally friendly, no mercury, no UV, no IR
- Wide beam angle 120°
- 5 years warranty
- Quick start instant 100% luminous flux
- Certificate: CE, RoHS, CB, IK10, IP69K, ENEC, RCM, SAA, DLG, ETL certified
- Surface mount or suspension mount

APPROVED 2022 DLG WWW.DLG.ORG

TUBU
LED TUBULAR LIGHT
✓ Resistance to ammonia
DLG Test Report 7286

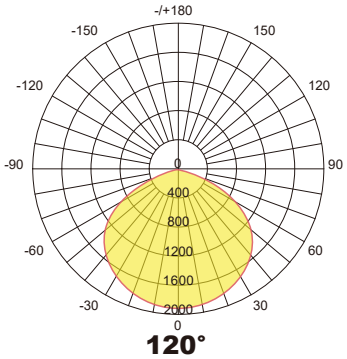

Applications

- Car parks
- Ships
- Food processing
- Poultry lighting
- Farm lighting
- Water treatment plants
- Railway stations
- Car washing
- Airports
- Inspection pits
- Tunnels
- Port installations

CE | CB | RoHS | DLG | 5 Year WARRANTY

AC200-240V | -20~+40 | IK10 | RG 0/1 | 50.000H | Dimmable | Emergency | IP69K

Single Installation

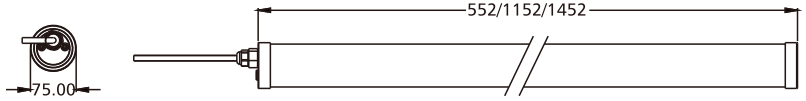

Linkable Installation

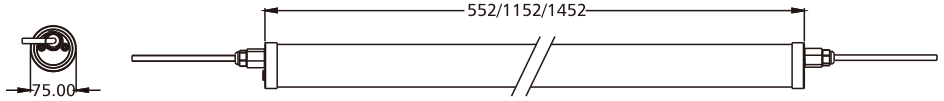

Surface Mount

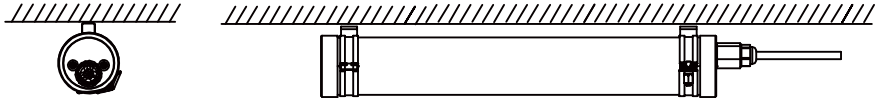

Suspension Mount

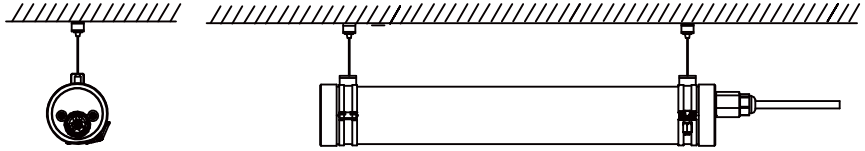

Specifications

Product Code	TBL92F-20W	TBL94F-40W	TBL95F-50W	TBL95F-60W
Power	20W	40W	50W	60W
Input Voltage	200-240VAC / 100-277VAC (50/60Hz)			
Input Current	0.09A@220VAC	0.19A@220VAC	0.23A@220VAC	0.28A@220VAC
PF	0.90@220VAC			
Dimming Option	0-10V / DALI			
CCT	2700K / 3000K / 4000K / 5000K / 5700K / 6000K /6500K			
Luminous Flux	2800Lm	5600Lm	7000Lm	8400Lm
Efficiency	140Lm/W±5% (Ra>80)			
Luminous Flux	3400Lm	6800Lm	8500Lm	10200Lm
Efficiency	170Lm/W±5% (Ra>80)			
LED Brand	Lumileds / Hongli 2835			
Beam Angle	120°			
Operation Temp	-20℃~+40℃			
Storage Temp	-20℃~+60℃			
Life Span	Ta 40℃ L70>54000 hours			
IP Class	IP67 & IP69K			
IK Class	PMMA IK08 / PC IK10			
Certificate	CE, RoHS, CB, IK10, IP69K, ENEC, RCM, SAA, DLG, ETL			
Lamp Body Color	Milky PC / PMMA housing & 304 / 316 stainless steel end caps			
Product Size (mm)	∅75*552	∅75*1152	∅75*1452	∅75*1452
Packing Size (mm)	730*260*260	1330*260*180	1630*260*180	1630*260*180
Quantity / Carton	9PCS	6PCS	6PCS	6PCS
Gross Weight (kg) ±0.3	13	12	14	14
Installation Mode	Surface mount / Suspension mount			

TUBU

Ø47mm LED Tri-proof Light L9M

Features

- IP69K, IP67
- PC IK08 / PMMA IK07
- System efficiency up to 150Lm/W
- High CRI>80, SDCM<3
- Environmentally friendly, no mercury, no UV, no IR
- Wide beam angle 120°
- Quick start instant 100% luminous flux
- 5 years warranty
- Certificate: CE, RoHS certified

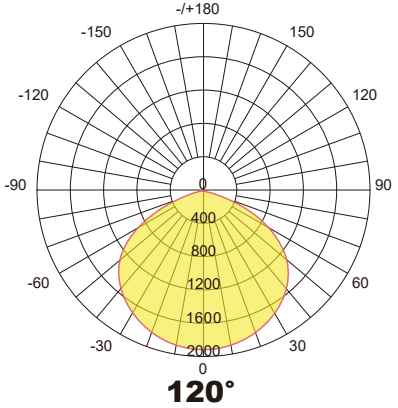

Applications

- Car parks
- Ships
- Food processing
- Poultry lighting
- Farm lighting
- Water treatment plants
- Railway stations
- Car washing
- Airports
- Inspection pits
- Tunnels
- Port installations

CE | IK08 | RoHS | 5 Year WARRANTY | IP69K

AC200-240V | -20~+40 | IK08 | RG 0/1 | 50.000H | IP67

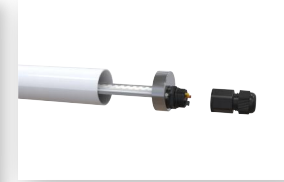

Single Installation

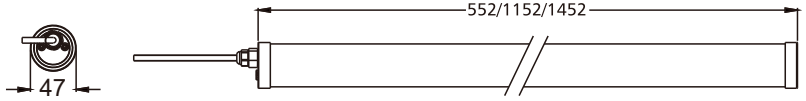

Linkable Installation

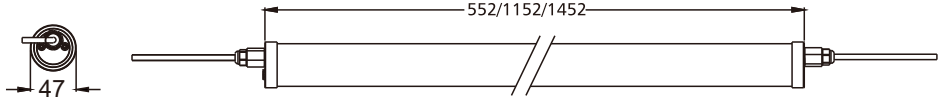

Surface Mount

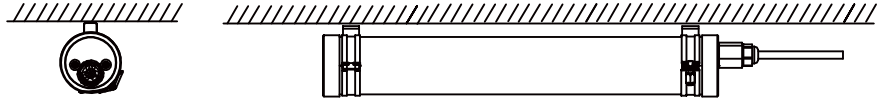

Suspension Mount

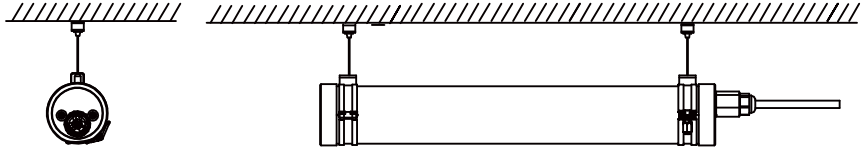

Specifications

Product Code	TBL9M2F-15W	TBL9M4F-30W	TBL9M5F-45W
Power	15W	30W	45W
Input Voltage	100-240V / 277VAC (50/60Hz)		
Input Current	0.07A@220VAC	0.14A@220VAC	0.23A@220VAC
PF	0.90@220VAC		
Dimming Option	/		
CCT	2700K / 3000K / 4000K / 5000K / 5700K / 6000K /6500K		
Luminous Flux	1950Lm	3900Lm	5850Lm
Efficiency	130Lm/W±5% (Ra>80)		
Luminous Flux	2250Lm	4500Lm	6750Lm
Efficiency	150Lm/W±5% (Ra>80)		
LED Brand	Lumileds / Hongli 2835		
Beam Angle	120°		
Operation Temp	-20℃~+40℃		
Storage Temp	-20℃~+60℃		
Life Span	Ta 40℃ L70>54000 hours		
IP Class	IP67 / IP69K		
IK Class	PC IK08 / PMMA IK07		
Certificate	CE, RoHS		
Lamp Body Color	Milky PC / PMMA housing & 304 / 316 stainless steel end caps		
Product Size (mm)	Ø47*552	Ø47*1152	Ø47*1452
Packing Size (mm)	690*245*310	1290*245*310	1590*245*310
Quantity / Carton	20PCS	20PCS	20PCS
Gross Weight (kg) ±0.3	14	15	17.5
Installation Mode	Surface mount / Suspension mount		

TUBU

LED Tri-proof Light 180° L9M

Features

- IP66 & IP69K
- PC IK08
- System efficiency up to 140lm/W & 160lm/W
- High CRI>80
- Environmentally friendly, no mercury, no UV, no IR
- Wide beam angle 180°
- Energy efficiency Grade: D
- Quick start instant 100% luminous flux
- 5 years warranty on complete fixture (LED's, Driver & Housing)
- Certificate: CE, RoHs Certified
- Surface Mount or Suspension Mount

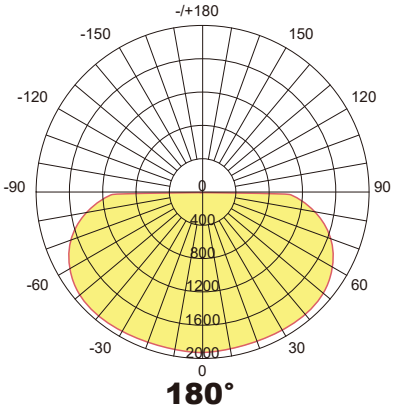

Applications

- Car parks
- Ships
- Food Processing
- Poultry Lighting
- Farm lighting
- Railway stations

CE RoHS 50.000H IP69K 5 Year WARRANTY

AC200-240V -20~+40 IK08 RG 0/1 Dimmable Emergency

Single Installation

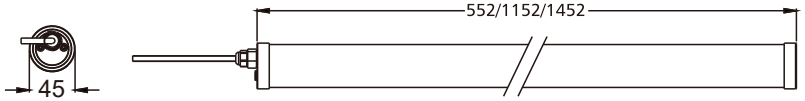

Linkable Installation

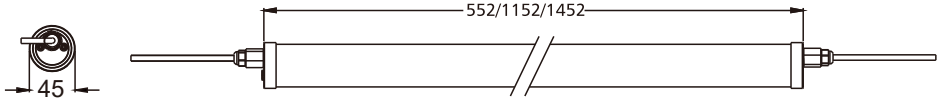

Surface Mount

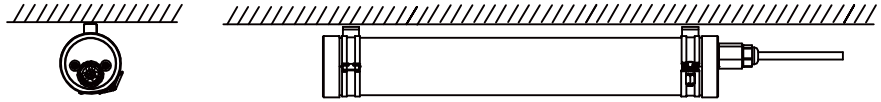

Suspension Mount

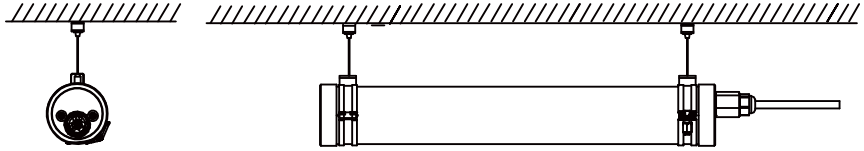

Specifications

Product Code	TBL9M2F-15W	TBL9M4F-30W	TBL9M5F-45W
Power	15W	30W	45W
Input Voltage	200-240VAC / 100-277VAC (50/60Hz)		
Input Current	0.15A@220VAC	0.3A@220VAC	0.4A@220VAC
PF	0.90@220VAC		
Dimming Option	/		
CCT	2700K / 3000K / 4000K / 5000K / 5700K / 6000K /6500K		
Luminous Flux	2100Lm / 2400Lm	4200Lm / 4800Lm	6300Lm / 7200Lm
Efficiency	140lm/W & 160lm/W±5% (Ra>80)		
LED Brand	Lumileds / Hongli 2835		
Beam Angle	180°		
Operation Temp	-20°C~+40°C		
Storage Temp	-20°C~+60°C		
Life Span	Ta 40°C L70>54000 hours		
IP Class	IP66 & IP69K		
IK Class	PC IK08		
Certificate	CE, RoHs		
Lamp Body Color	Milky PC / PMMA Housing & 304 / 316 Stainless Steel End Caps		
Product Size (mm)	Ø47*552	Ø47*1152	Ø47*1452
Packing Size (mm)	690*245*310	1290*245*310	1590*245*310
Quantity / Carton	20PCS	20PCS	20PCS
Gross Weight (kg) ±0.3	14	16	19.6
Installation Mode	Surface mount / Suspension mount		

TUBU

Ø100mm LED Tri-proof Light L9P

Features

- IP67 & IP69K & IK10
- PMMA IK08 / PC IK10
- System efficiency up to 170Lm/W
- Against water pressure of 100bar (1450psi) and temperature of 80℃
- Environmentally friendly, no mercury, no UV, no IR
- High CRI>80
- 5 years warranty
- Wide beam angle 120°
- Quick start instant 100% luminous flux
- Certificate: CE, RoHS certified
- Surface mount or suspension mount

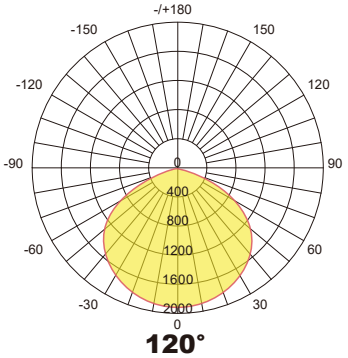

Applications

- Car parks
- Ships
- Food processing
- Poultry lighting
- Farm lighting
- Water treatment plants
- Railway stations
- Car washing
- Airports
- Inspection pits
- Tunnels
- Port installations

CE | RoHS | 5 Year WARRANTY | IP69K | Emergency

AC200-240V | -20~+40 | IK10 | RG 0/1 | 50.000H | Dimmable

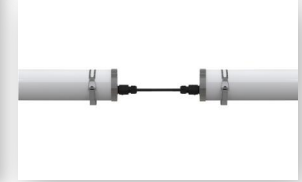

Single Installation

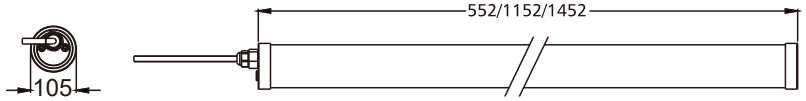

Linkable Installation

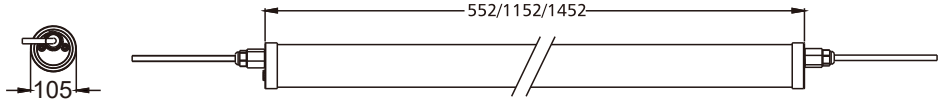

Surface Mount

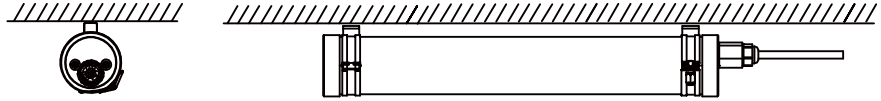

Suspension Mount

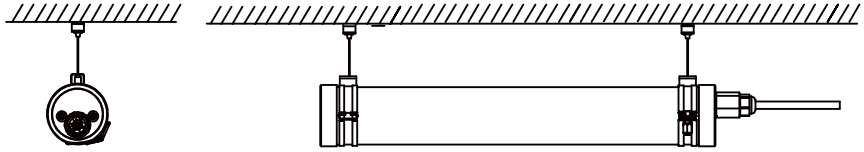

Specifications

Product Code	TBL9P2F-30W	TBL9P4F-60W	TBL9P5F-80W
Power	30W	60W	80W
Input Voltage	200-240VAC / 100-277VAC (50/60Hz)		
Input Current	0.15A@220VAC	0.3A@220VAC	0.4A@220VAC
PF	0.90@220VAC		
Dimming Option	0-10V / DALI		
CCT	2700K / 3000K / 4000K / 5000K / 5700K / 6000K /6500K		
Luminous Flux	4200Lm	8400Lm	11200Lm
Efficiency	140Lm/W±5% (Ra>80)		
Luminous Flux	5100Lm	10200Lm	13600Lm
Efficiency	170Lm/W±5% (Ra>80)		
LED Brand	Lumileds / Hongli 2835		
Beam Angle	120°		
Operation Temp	-20℃~+40℃		
Storage Temp	-20℃~+60℃		
Life Span	Ta 40℃ L70>54000 hours		
IP Class	IP67 & IP69K		
IK Class	PMMA IK08 / PC IK10		
Certificate	CE, RoHS, IK10, IP69K		
Lamp Body Color	Milky PC / PMMA housing & 304 / 316 stainless steel end caps		
Product Size (mm)	∅105*552	∅105*1152	∅105*1452
Packing Size (mm)	730*340*345	1330*345*240	1630*345*240
Quantity / Carton	9PCS	6PCS	6PCS
Gross Weight (kg) ±0.3	14	15	17
Installation Mode	Surface mount / Suspension mount		

TUBU

Ø100mm Grid Type LED Tubular Light

Features

- IP67 & IP69K & IK10
- PMMA IK08 / PC IK10
- Anti-ammoinia
- Against water pressure of 100bar (1450psi) and temperature of 80°C
- System efficiency up to 100Lm/W
- High CRI>80
- Environmentally friendly, no mercury, no UV, no IR
- Wide beam angle 120°
- Grid angle 45° / 90°
- Energy efficiency Grade:A+
- Quick Start instant 100% luminous flux
- 5 years warranty on complete fixture (LED's, Driver & Housing)
- Certificate: CE, RoHs Certified
- Surface Mount or Suspension Mount

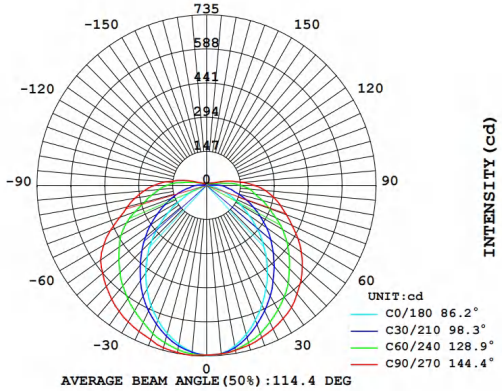

Applications

- Car parks
- Ships
- Food Processing
- Poultry Lighting
- Farm lighting
- Railway stations

CE | RoHS | 50.000H | IP69K | 5 Year WARRANTY

AC200-240V | -20~+40 | IK10 | RG 0/1 | Dimmable | Emergency

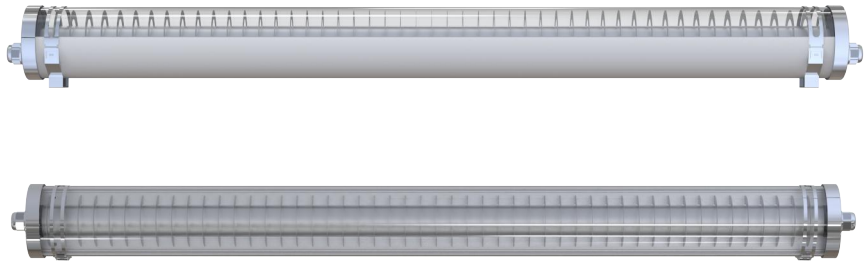

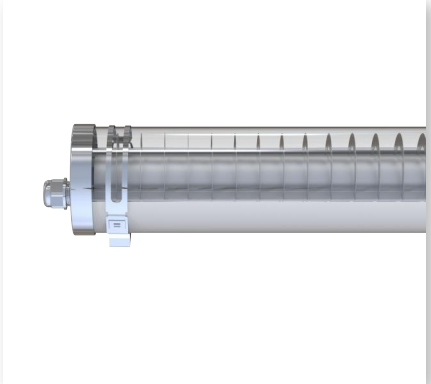

Single Installation

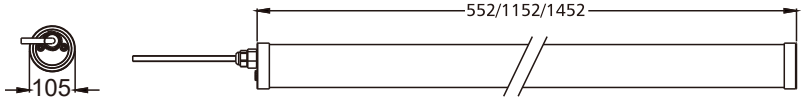

Linkable Installation

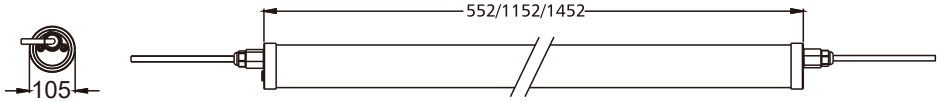

Surface Mount

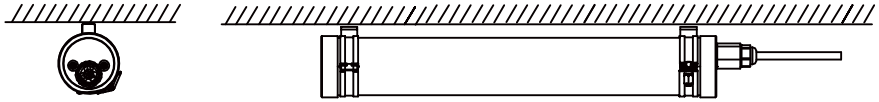

Suspension Mount

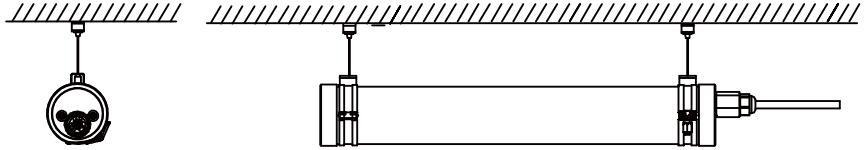

Specifications

Product Code	TBL9P2F-20W	TBL9P4F-40W	TBL9P5F-60W
Power	20W	40W	60W
Input Voltage	200-240VAC / 100-277VAC (50/60Hz)		
Input Current	0.15A@220VAC	0.3A@220VAC	0.4A@220VAC
PF	0.90@220VAC		
Dimming Option	0-10V/Dali		
CCT	2700K / 3000K / 4000K / 5000K / 5700K / 6000K /6500K		
Luminous Flux	2000Lm	4000Lm	6000Lm
Efficiency	100Lm/W±5% (Ra>80)		
LED Brand	Lumileds/Hongli 2835		
Beam Angle	120°		
Operation Temp	-20°C~+40°C		
Storage Temp	-20°C~+60°C		
Life Span	Ta 40°C L70>54000 hours		
IP Class	IP67 & IP69K		
IK Class	PMMA IK08 / PC IK10		
Certificate	CE, RoHS, IK10, IP69K		
Lamp Body Color	Milky PC/PMMA Housing & 304/316 Stainless Steel End Caps		
Product Size (mm)	∅105*552	∅105*1152	∅105*1452
Packing Size (mm)	730*340*345mm	1330*345*240mm	1630*345*240mm
Quantity / Carton	9PCS	6PCS	6PCS
Gross Weight (kg) ±0.3	14	15	17.5
Installation Mode	Surface mount / Suspension mount		

TUBU

Grid Type LED Tubular Light

Features

- IP67 & IP69K
- PMMA IK08 / PC IK10
- Against water pressure of 100bar (1450psi) and temperature of 80℃
- System efficiency up to 60Lm/W
- High CRI>80
- Environmentally friendly, no mercury, no UV, no IR
- Wide beam angle 80*120°
- Quick start instant 100% luminous flux
- 5 years warranty
- Certificate: CE, RoHS certified
- Surface mount or suspended

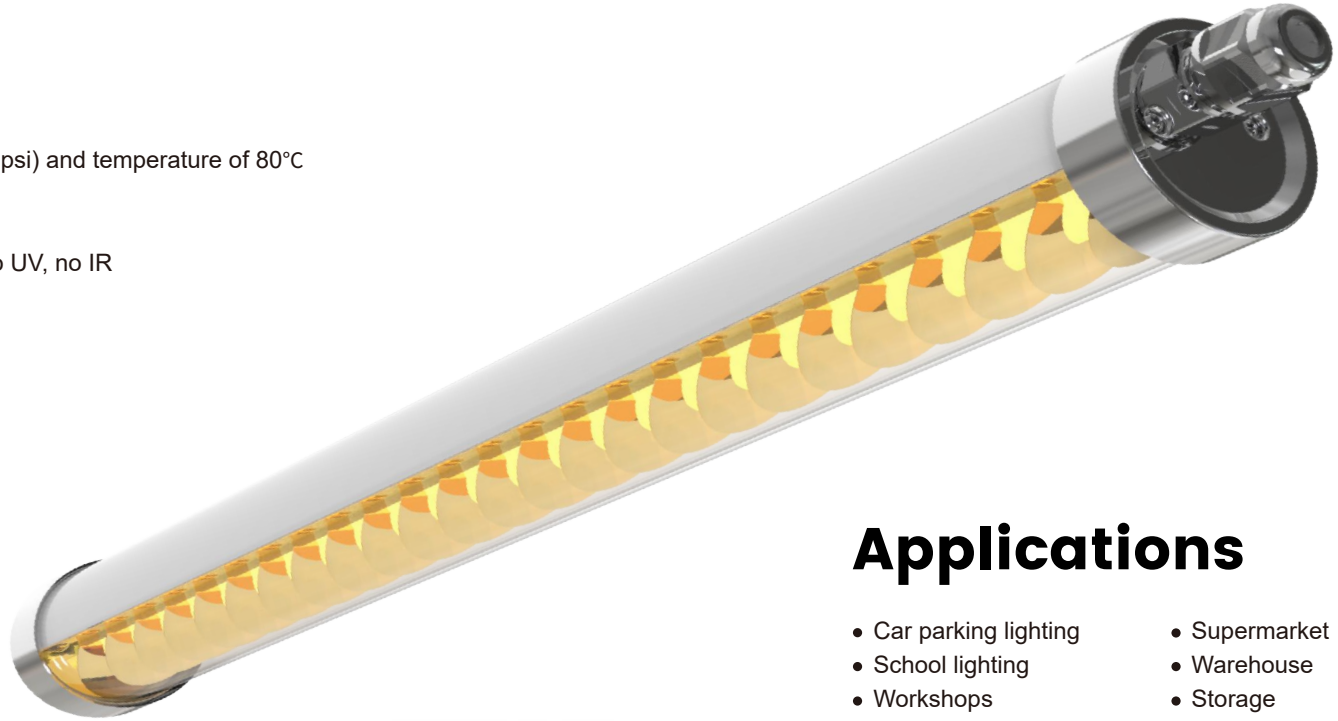

Applications

- Car parking lighting
- School lighting
- Workshops
- Supermarket
- Warehouse
- Storage

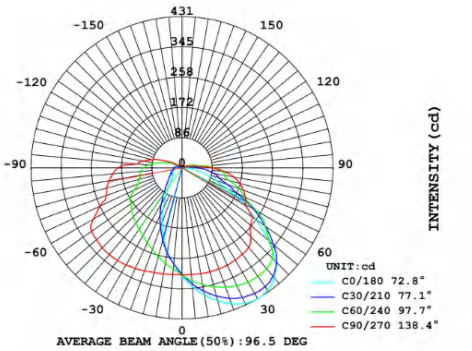

CE | RoHS | 50.000H | IP69K | 5 Year WARRANTY

AC200-240V | -20~+40 | IK10 | RG 0/1 | Dimmable | Emergency

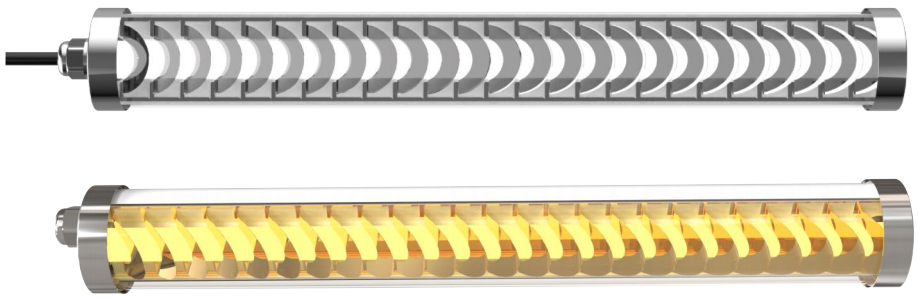

Single Installation

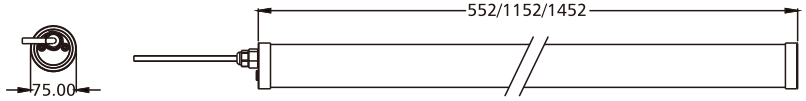

Surface Mount

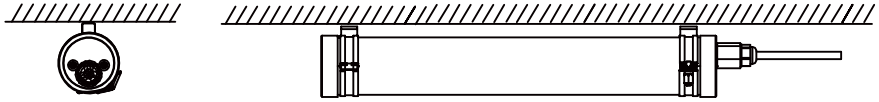

Suspension Mount

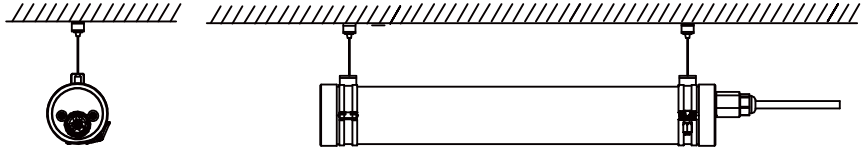

Specifications

Product Code	TBL92F-20W-G	TBL94F-40W-G	TBL95F-50W-G	TBL95F-60W-G
Power	20W	40W	50W	60W
Input Voltage	200-240VAC / 100-277VAC (50/60Hz)			
Input Current	0.09A@220VAC	0.19A@220VAC	0.23A@220VAC	0.28A@220VAC
PF	0.90@220VAC			
Dimming Option	0-10V / DALI			
CCT	2700K / 3000K / 4000K / 5000K / 5700K / 6000K /6500K			
Luminous Flux	1200Lm	2400Lm	3000Lm	3600Lm
Efficiency	60Lm/W±5% (Ra>80)			
LED Brand	Lumileds / Hongli			
Beam Angle	80*120°			
Operation Temp	-20°C~+40°C			
Storage Temp	-20°C~+60°C			
Life Span	Ta 40°C L70>54000 hours			
IP Class	IP67 & IP69K			
IK Class	PMMA IK08 / PC IK10			
Certificate	CE, RoHS, IK10, IP69K			
Lamp Body Color	Milky PC / PMMA housing & 304 / 316 stainless steel end caps			
Product Size (mm)	∅75*552	∅75*1152	∅75*1452	∅75*1452
Packing Size (mm)	730*260*260	1330*260*180	1630*260*180	1630*260*180
Quantity / Carton	9PCS	6PCS	6PCS	6PCS
Gross Weight (kg) ±0.3	13	12	14	14
Installation Mode	Surface mount / Suspension mount			

TUBU

UGR<16 LED Tubular Light

Features

- IP67 & IP69K & IK10
- PMMA IK08 / PC IK10
- Against water pressure of 100bar (1450psi) and temperature of 80℃
- System efficiency up to 130Lm/W
- High CRI>80
- UGR<16
- Environmentally friendly, no mercury, no UV, no IR
- Wide range beam angle 50°/80°
- 5 years warranty
- Quick start instant 100% luminous flux
- Certificate: CE, RoHS certified
- Surface mount or suspended

Applications

- Car parks
- Ships
- Food processing
- Poultry lighting
- Farm lighting
- Water treatment plants
- Railway stations
- Car washing
- Airports
- Inspection pits
- Tunnels
- Port installations

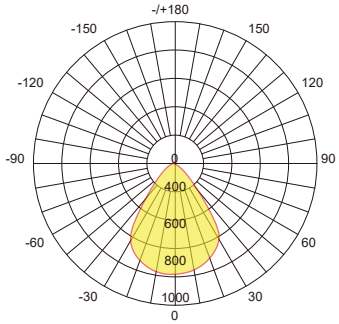

50°

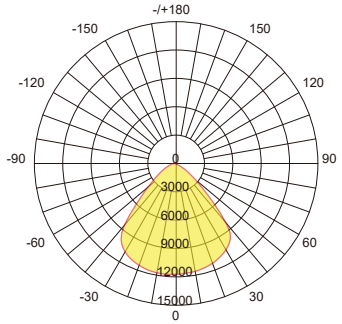

80°

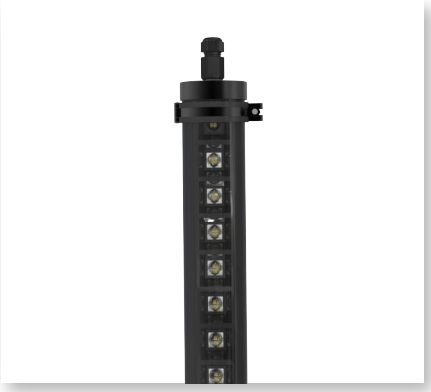

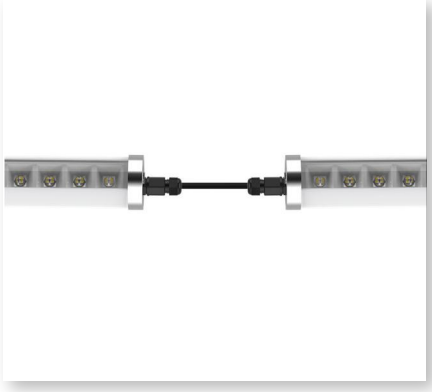

Single Installation

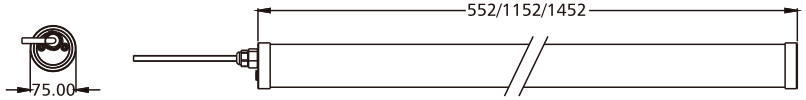

Linkable Installation

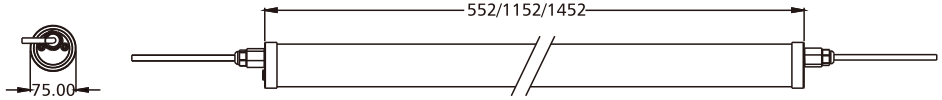

Surface Mount

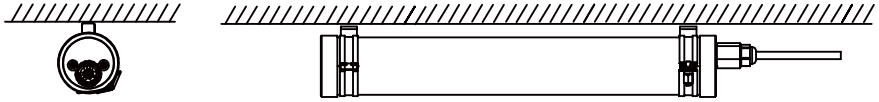

Suspension Mount

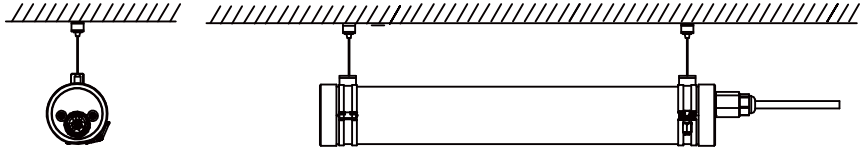

Specifications

Product Code	TBL92F-20W-UGR	TBL94F-40W-UGR	TBL95F-50W-UGR	TBL95F-60W-UGR
Power	20W	40W	50W	60W
Input Voltage	200-240VAC / 100-277VAC (50/60Hz)			
Input Current	0.09A@220VAC	0.19A@220VAC	0.23A@220VAC	0.28A@220VAC
PF	0.90@220VAC			
Dimming Option	0-10V / DALI			
CCT	2700K / 3000K / 4000K / 5000K / 5700K / 6000K /6500K			
Luminous Flux	2600Lm	5200Lm	6500Lm	7800Lm
Efficiency	130Lm/W±5% (Ra>80)			
LED Brand	Lumileds / Hongli			
Beam Angle	50° UGR<16 / 80° UGR<19			
Operation Temp	-20℃~+40℃			
Storage Temp	-20℃~+60℃			
Life Span	Ta 40℃ L70>54000 hours			
IP Class	IP67 & IP69K			
IK Class	PMMA IK08 / PC IK10			
Certificate	CE, RoHS, IK10, IP69K			
Lamp Body Color	Milky PC / PMMA housing & 304 / 316 Stainless steel end caps			
Product Size (mm)	∅75*552	∅75*1152	∅75*1452	∅75*1452
Packing Size (mm)	730*260*260	1330*260*180	1630*260*180	1630*260*180
Quantity / Carton	9PCS	6PCS	6PCS	6PCS
Gross Weight (kg) ±0.3	13	12	14	14
Installation Mode	Surface mount / Suspension mount			

TUBU

UGR<19 IP69K Tri-proof Light

Features

- UGR<19 low glare
- PMMA clear IK08 / PC clear IK10
- IP67 & IP69K
- Against water pressure of 100bar (1450psi) and temperature of 80℃
- System efficiency up to 150Lm/W
- High CRI>80
- 304 / 316 stainless steel end caps, breather, mounting bracket
- Flicker free
- Wide range beam angle 40°/60°/90°
- CE, RoHS, IP69K, IK10, certified
- 5 years warranty

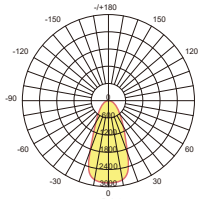

40°

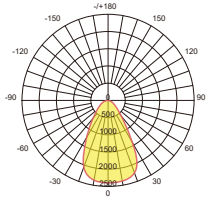

60°

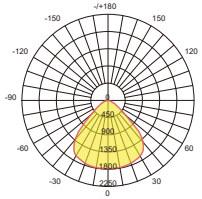

90°

Applications

- Tunnels
- Car parks
- Cultural facilities
- Housing facilities
- Urban lighting
- Sports facilities
- Schools and universities
- Railway stations and airports
- Public institutions and offices
- Port and naval installations
- Water treatment
- Inspection pits

CE | RoHS | 50.000H | IP69K | 5 Year WARRANTY

AC200-240V | -20~+40 | IK10 | RG 0/1 | Dimmable | Emergency

Single Installation

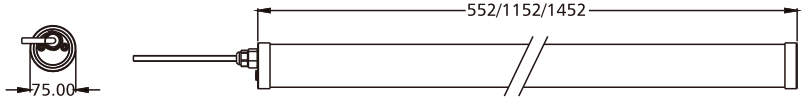

Linkable Installation

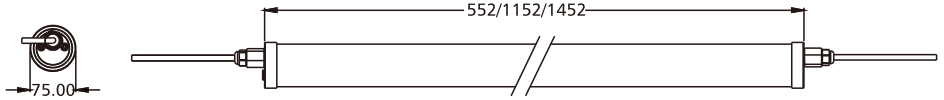

Surface Mount

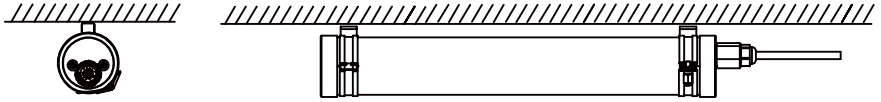

Suspension Mount

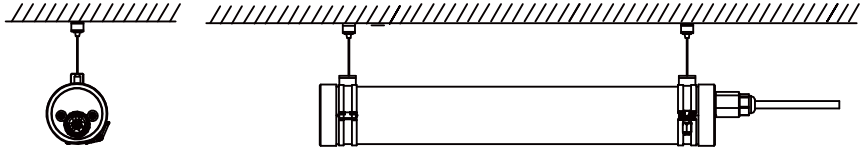

Specifications

Product Code	TBL92F-20W-DXG	TBL94F-40W-DXG	TBL95F-50W-DXG	TBL95F-60W-DXG
Power	20W	40W	50W	60W
Input Voltage	200-240VAC / 100-277VAC (50/60Hz)			
Input Current	0.09A@220VAC	0.19A@220VAC	0.23A@220VAC	0.28A@220VAC
PF	0.90@220VAC			
Dimming Option	0-10V / DALI			
CCT	2700K / 3000K / 4000K / 5000K / 5700K / 6000K /6500K			
Luminous Flux	2600Lm / 3000Lm	5200Lm / 6000Lm	6500Lm / 7500Lm	7800Lm / 9000Lm
Efficiency	130Lm/W±5% / 150Lm/W±5% (Ra>80)			
LED Brand	Lumileds / Hongli 3030			
Beam Angle	40° UGR<16 / 60° UGR<19 / 90° UGR<22			
Operation Temp	-20°C~+40°C			
Storage Temp	-20°C~+60°C			
Life Span	Ta 40°C L70>54000 hours			
IP Class	IP67 & IP69K			
IK Class	PMMA IK08 / PC IK10			
Certificate	CE, RoHS, IP69K			
Lamp Body Color	Milky PC / PMMA housing & 304 / 316 stainless steel end caps			
Product Size (mm)	∅75*552	∅75*1152	∅75*1452	∅75*1452
Packing Size (mm)	730*260*260	1330*260*180	1630*260*180	1630*260*180
Quantity / Carton	9PCS	6PCS	6PCS	6PCS
Gross Weight (kg) ±0.3	13	12	14	14
Installation Mode	Surface mount / Suspension mount			

TUBU

Mesh Type LED Tubular Light

Features

- IP67 & IP69K
- PMMA IK08 / PC IK10
- Against water pressure of 100bar (1450psi) and temperature of 80℃
- System efficiency up to 40Lm/W
- High CRI>80
- Environmentally friendly, no mercury, no UV, no IR
- Wide beam angle 120°
- Quick start instant 100% luminous flux
- 5 years warranty
- Certificate: CE, RoHS certified
- Surface mount or suspended

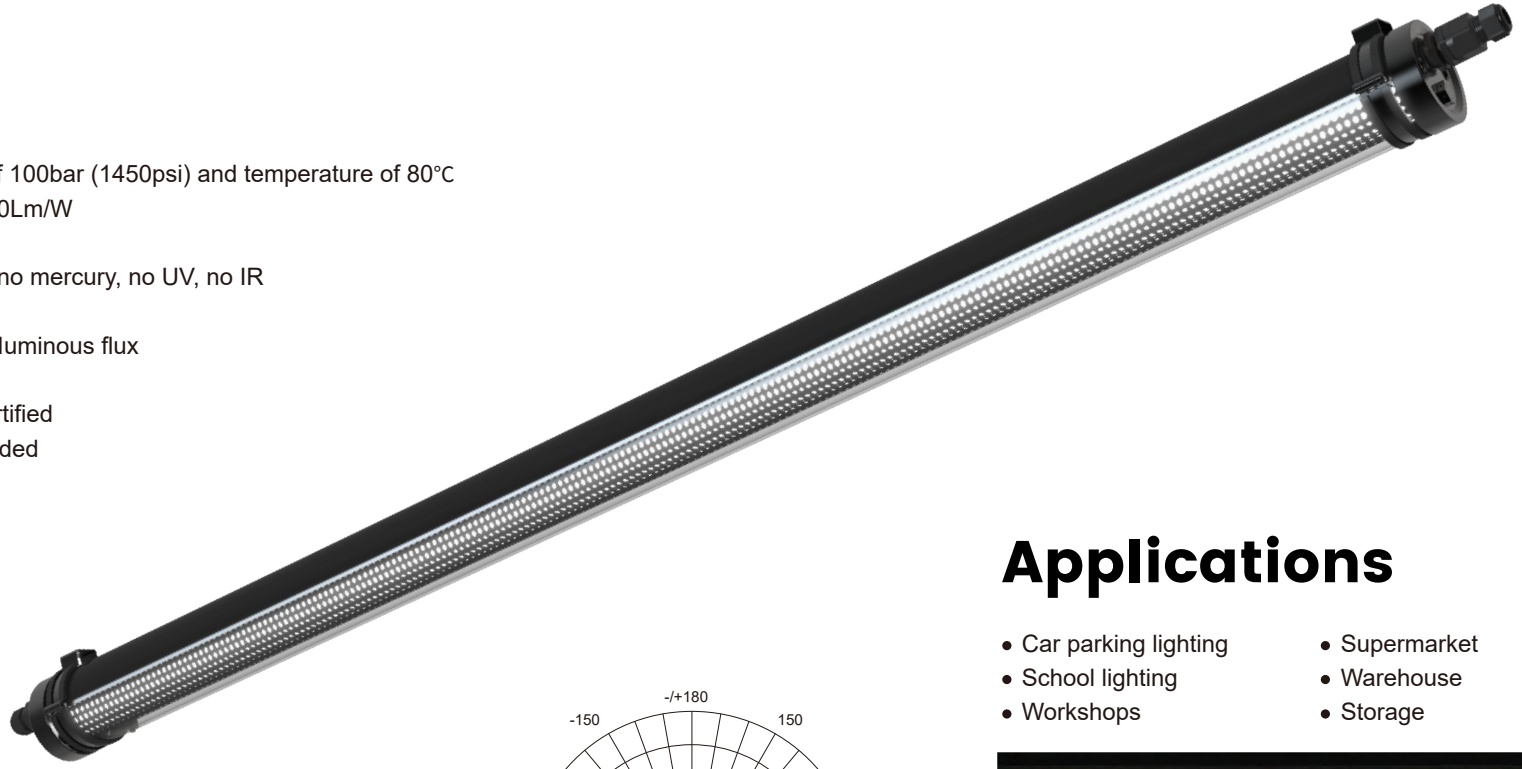

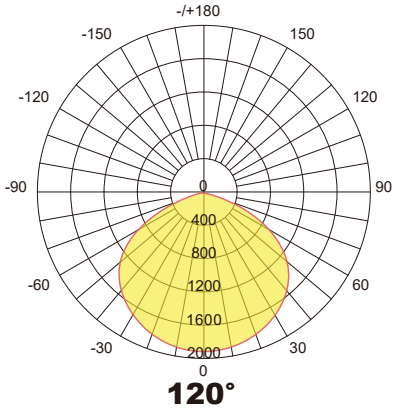

Applications

- Car parking lighting
- School lighting
- Workshops
- Supermarket
- Warehouse
- Storage

CE | RoHS | 50.000H | IP69K | 5 Year WARRANTY

AC200-240V | -20~+40 | IK10 | RG 0/1 | Dimmable | Emergency

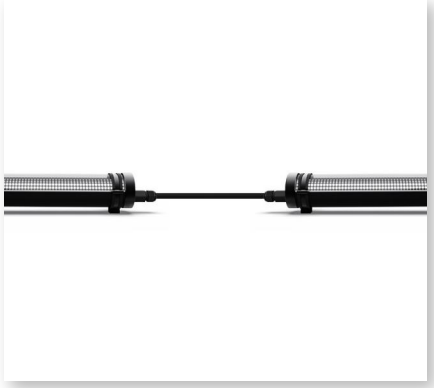

Single Installation

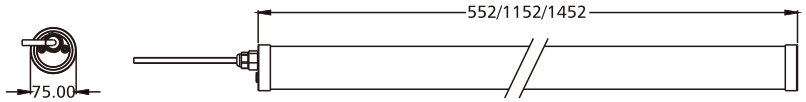

Linkable Installation

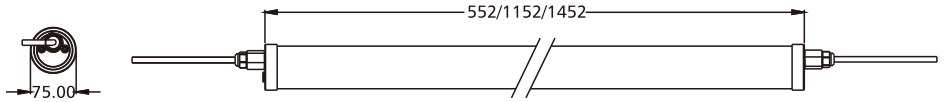

Surface Mount

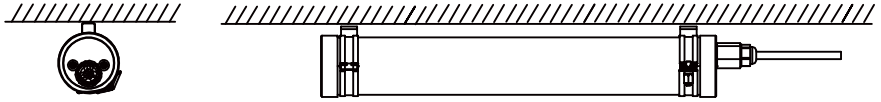

Suspension Mount

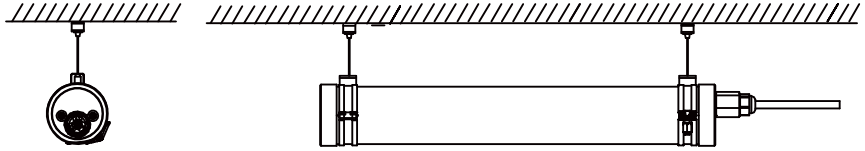

Specifications

Product Code	TBL92F-20W-M	TBL94F-40W-M	TBL95F-50W-M	TBL95F-60W-M
Power	20W	40W	50W	60W
Input Voltage	200-240VAC / 100-277VAC (50/60Hz)			
Input Current	0.09A@220VAC	0.19A@220VAC	0.23A@220VAC	0.28A@220VAC
PF	0.90@220VAC			
Dimming Option	0-10V / DALI			
CCT	2700K / 3000K / 4000K / 5000K / 5700K / 6000K /6500K			
Luminous Flux	1200Lm	2400Lm	3000Lm	3600Lm
Efficiency	40Lm/W±5% (Ra>80)			
LED Brand	Lumileds / Hongli			
Beam Angle	120°			
Operation Temp	-20℃~+40℃			
Storage Temp	-20℃~+60℃			
Life Span	Ta 40°C L70>54000 hours			
IP Class	IP67 & IP69K			
IK Class	PMMA IK08 / PC IK10			
Certificate	CE, RoHS, IK10, IP69K			
Lamp Body Color	Milky PC / PMMA housing & 304 / 316 stainless steel end caps			
Product Size (mm)	∅75*552	∅75*1152	∅75*1452	∅75*1452
Packing Size (mm)	730*260*260	1330*260*180	1630*260*180	1630*260*180
Quantity / Carton	9PCS	6PCS	6PCS	6PCS
Gross Weight (kg) ±0.3	13	12	14	14
Installation Mode	Surface mount / Suspension mount			

TUBU

High Borosilicate Glass LED Tri-Proof Light

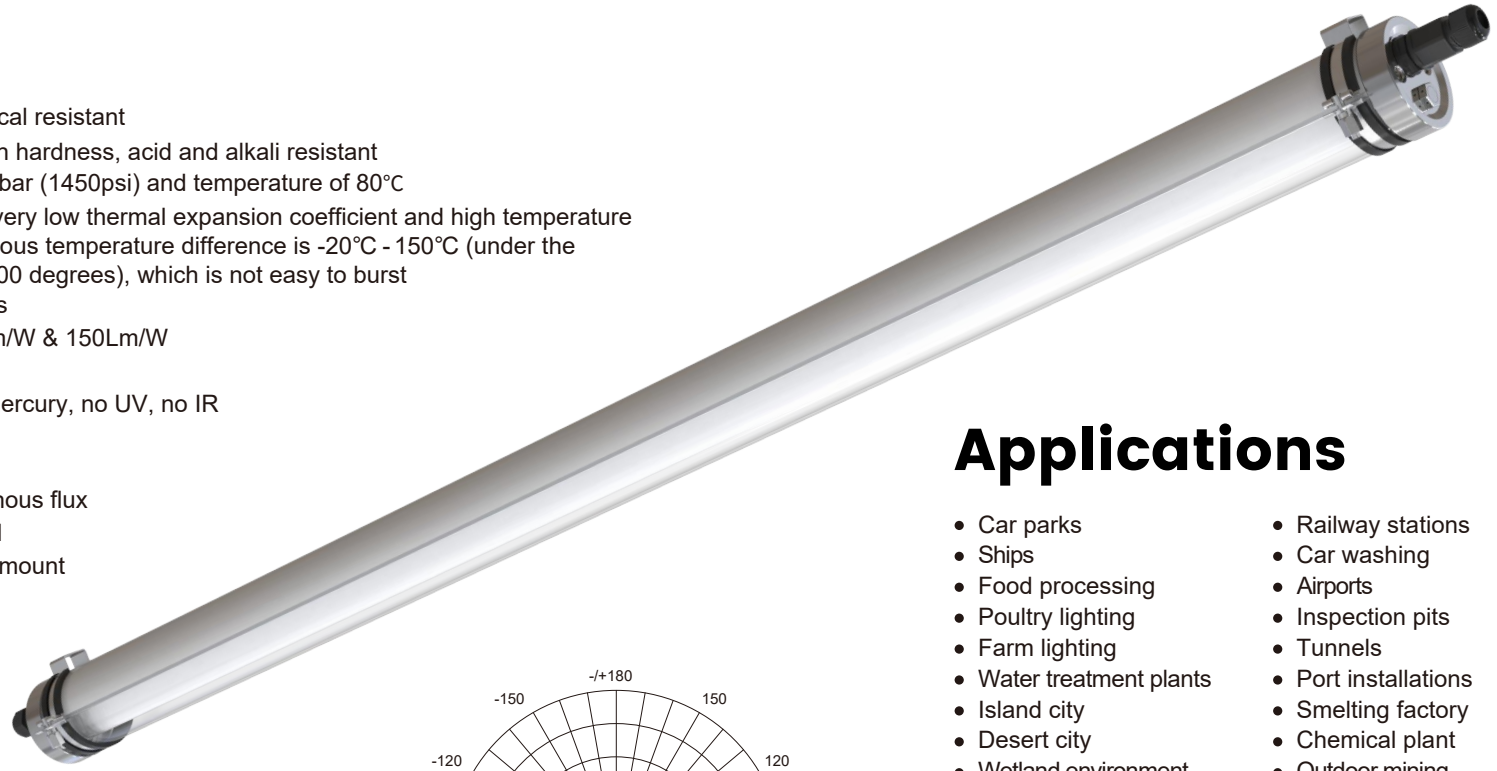

Features

- IP67 & IP69K & IK08
- High borosilicate glass, chemical resistant
- High corrosion resistance, high hardness, acid and alkali resistant
- Against water pressure of 100bar (1450psi) and temperature of 80℃
- High borosilicate glass has a very low thermal expansion coefficient and high temperature resistance, and the instantaneous temperature difference is -20℃ - 150℃ (under the temperature mutation within 200 degrees), which is not easy to burst
- Meet the food-grade standards
- System efficiency up to 140Lm/W & 150Lm/W
- High CRI>80
- Environmentally friendly, no mercury, no UV, no IR
- 5 years warranty
- Wide beam angle 120°
- Quick start instant 100% luminous flux
- Certificate: CE, RoHS certified
- Surface mount or suspension mount

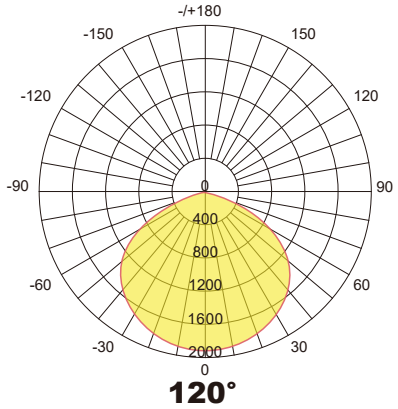

Applications

- Car parks
- Ships
- Food processing
- Poultry lighting
- Farm lighting
- Water treatment plants
- Island city
- Desert city
- Wetland environment
- War industry
- Railway stations
- Car washing
- Airports
- Inspection pits
- Tunnels
- Port installations
- Smelting factory
- Chemical plant
- Outdoor mining
- Hospital

CE | D | RoHS | IP69K | 5 Year WARRANTY

AC200-240V | -20~+40 | IK07 | RG 0/1 | Dimmable | 50.000H

Single Installation

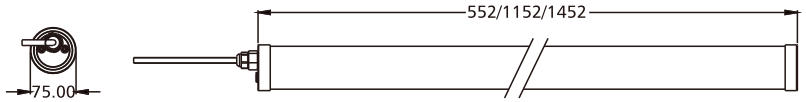

Linkable Installation

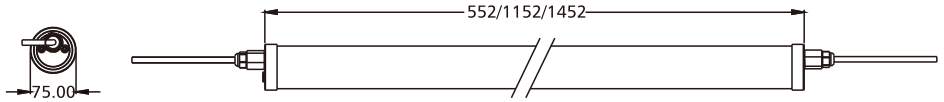

Surface Mount

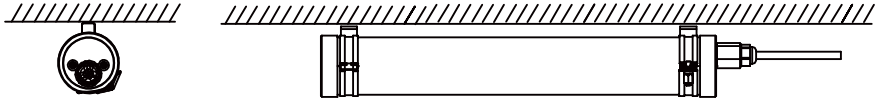

Suspension Mount

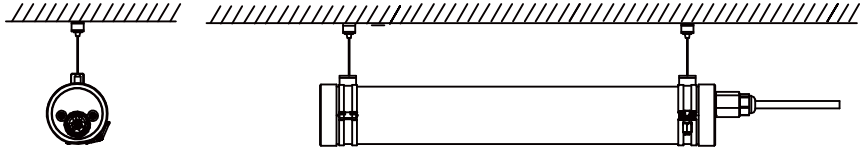

Specifications

Product Code	TBL92F-20W	TBL94F-40W	TBL95F-50W	TBL95F-60W
Power	20W	40W	50W	60W
Input Voltage	200-240VAC / 100-277VAC (50/60Hz)			
Input Current	0.09A@220VAC	0.19A@220VAC	0.23A@220VAC	0.28A@220VAC
PF	0.90@220VAC			
Dimming Option	0-10V / DALI			
CCT	2700K / 3000K / 4000K / 5000K / 5700K / 6000K /6500K			
Luminous Flux	2800Lm	5600Lm	7000Lm	8400Lm
Efficiency	140Lm/W±5% (Ra>80)			
Luminous Flux	3000Lm	6000Lm	7500Lm	9000Lm
Efficiency	150Lm/W±5% (Ra>80)			
LED Brand	Lumileds / Hongli 2835			
Beam Angle	120°			
Operation Temp	-20°C~+40°C			
Storage Temp	-20°C~+60°C			
Life Span	Ta 40°C L70>54000 hours			
IP Class	IP67 & IP69K			
IK Class	Glass IK08			
Certificate	CE, RoHS, IK08, IP69K			
Lamp Body Color	Glass transparent & 304 / 316 stainless steel end caps			
Product Size (mm)	Ø75*552	Ø75*1152	Ø75*1452	Ø75*1452
Packing Size (mm)	730*345*240	1330*345*240	1630*345*240	1630*345*240
Quantity / Carton	6PCS	4PCS	4PCS	4PCS
Gross Weight (kg) ±0.3	13	12	14	14
Installation Mode	Surface mount / Suspension mount			

TUBU

Tube Style LED Tubular Light

Features

- IP67 & IP69K
- PMMA IK08 / PC IK10
- Against water pressure of 100bar (1450psi) and temperature of 80℃
- System efficiency up to 130Lm/W
- High CRI>80
- Environmentally friendly, no mercury, no UV, no IR
- Wide beam angle 120°
- Quick start instant 100% luminous flux
- 5 years warranty
- Certificate: CE, RoHS certified
- Surface mount or suspended

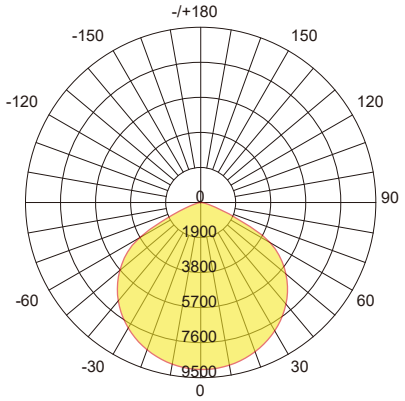

120°

Applications

- Car parking lighting
- School lighting
- Workshops
- Supermarket
- Warehouse
- Storage

Single Installation

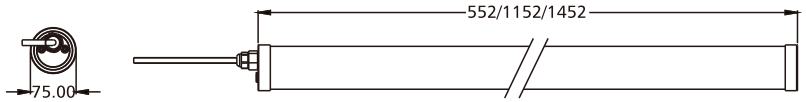

Linkable Installation

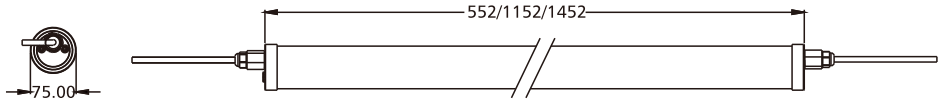

Surface Mount

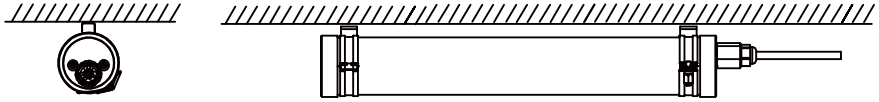

Suspension Mount

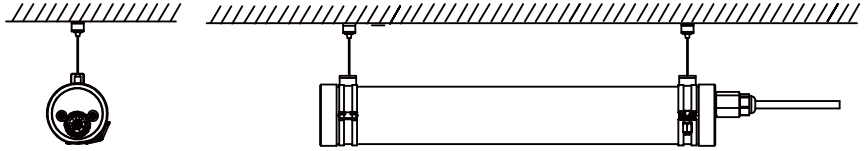

Specifications

Product Code	TBL92F-20W-T	TBL94F-40W-T	TBL95F-50W-T	TBL95F-60W-T
Power	20W	40W	50W	60W
Input Voltage	200-240VAC / 100-277VAC (50/60Hz)			
Input Current	0.09A@220VAC	0.19A@220VAC	0.23A@220VAC	0.28A@220VAC
PF	0.90@220VAC			
Dimming Option	0-10V / DALI			
CCT	2700K / 3000K / 4000K / 5000K / 5700K / 6000K /6500K			
Luminous Flux	2600Lm	5200Lm	6500Lm	7800Lm
Efficiency	130Lm/W±5% (Ra>80)			
LED Brand	Lumileds / Hongli			
Beam Angle	120°			
Operation Temp	-20℃~+40℃			
Storage Temp	-20℃~+60℃			
Life Span	Ta 40℃ L70>54000 hours			
IP Class	IP67 & IP69K			
IK Class	PMMA IK08 / PC IK10			
Certificate	CE, RoHS, IK10, IP69K			
Lamp Body Color	Milky PC / PMMA housing & 304 / 316 stainless steel end caps			
Product Size (mm)	∅75*552	∅75*1152	∅75*1452	∅75*1452
Packing Size (mm)	730*260*260	1330*260*180	1630*260*180	1630*260*180
Quantity / Carton	9PCS	6PCS	6PCS	6PCS
Gross Weight (kg) ±0.3	13	12	14	14
Installation Mode	Surface mount / Suspension mount			

TUBU

Farm RW LED Tubular Light

Features

- Red & white 2 in 1 CCT adjustable, designed for poultry farm
- IP67 & IP69K
- PMMA IK08 / PC IK10
- Anti-ammonia
- Against water pressure of 100bar (1450psi) and temperature of 80℃
- Environmentally friendly, no mercury, no UV, no IR
- Wide beam angle 120°
- Quick start instant 100% luminous flux
- 5 years warranty
- Certificate: CE, RoHS certified
- Surface mount or suspended

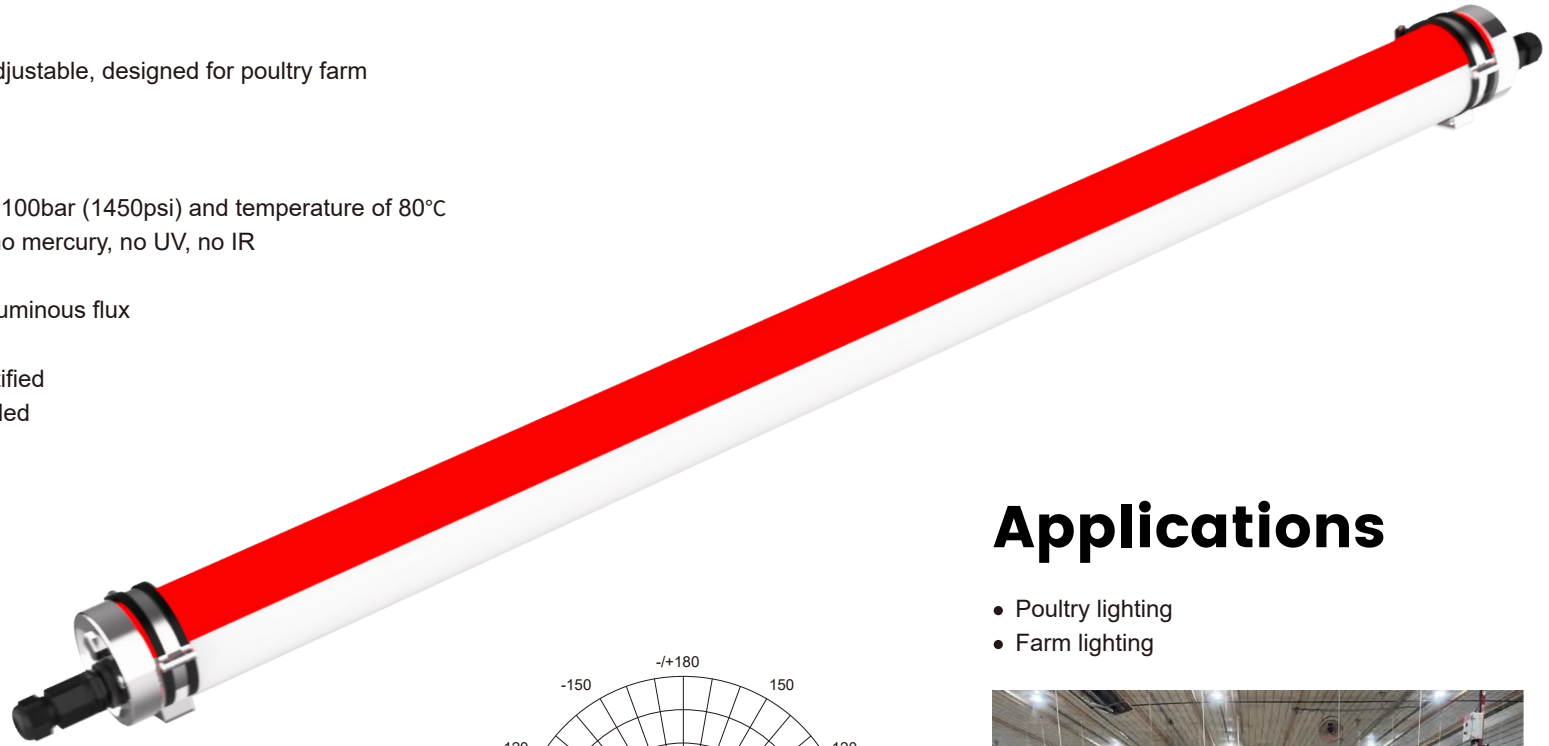

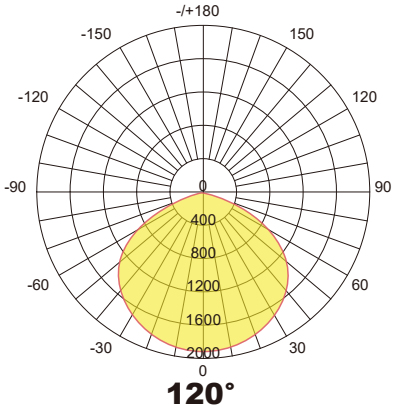

Applications

- Poultry lighting
- Farm lighting

CE | RoHS | 50.000H | IP69K

AC200-240V | -20~+40 | IK10 | RG 0/1 | Dimmable | 5 Year WARRANTY

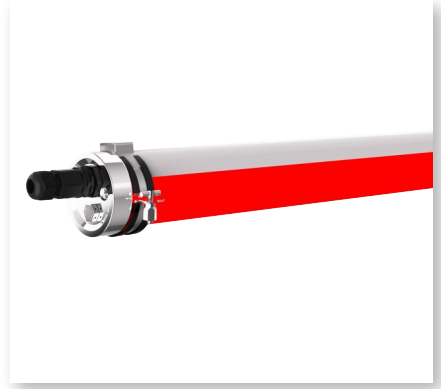

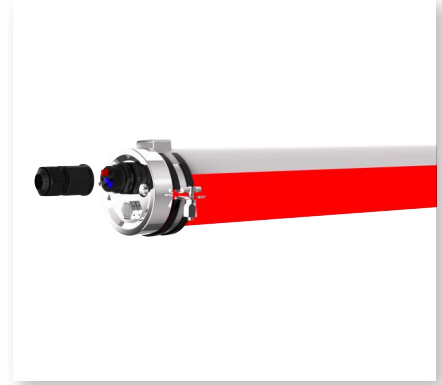

Single Installation

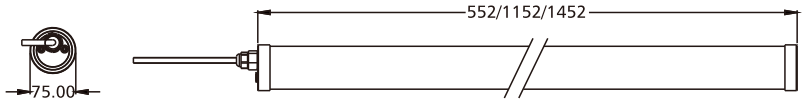

Linkable Installation

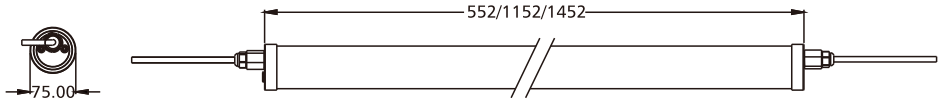

Surface mount

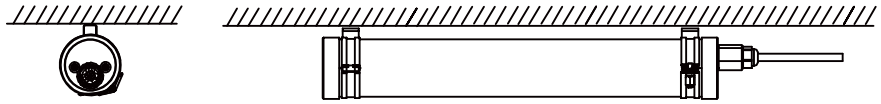

Suspension mount

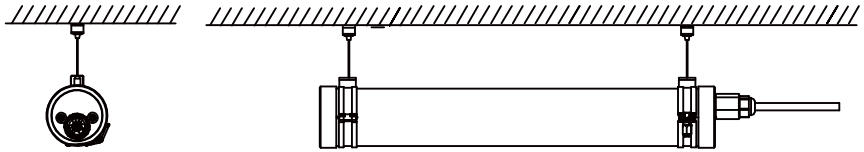

Specifications

Product Code	TBL94F-20W-RW	
Power	20W White + 20W Red	
Input Voltage	200-240VAC (50/60Hz)	
PF	0.90@220VAC	
Dimming	0-10V	
CCT	4000K(White) & 627nm(Red)	
Luminous Flux	2600Lm±5%	900Lm±5%
Efficiency	4000K 130Lm/W±5%(Ra > 80)	Red 45Lm/W±5%
LED Brand	Lumileds/Hongli 2835	
Beam Angle	120°	
Operation Temp	-20℃~+40℃	
Storage Temp	-20℃~+60℃	
Life Span	Ta 40℃ L70>54000 hours	
IP Class	IP67 & IP69K	
IK Class	PMMA IK08 / PC IK10	
Certificate	CE, RoHS, IK10, IP69K	
Lamp Body Color	Milky PC / PMMA Housing & 304 / 316 Stainless Steel End Caps	
Product Size (mm)	∅75*1152	
Packing Size (mm)	1330*260*180	
Quantity/carton	6PCS	
Gross weight (kg) ±0.3	12	
Installation mode	Surface Mount / Suspension Mount	

TUBU

Farm RW LED Tubular Light

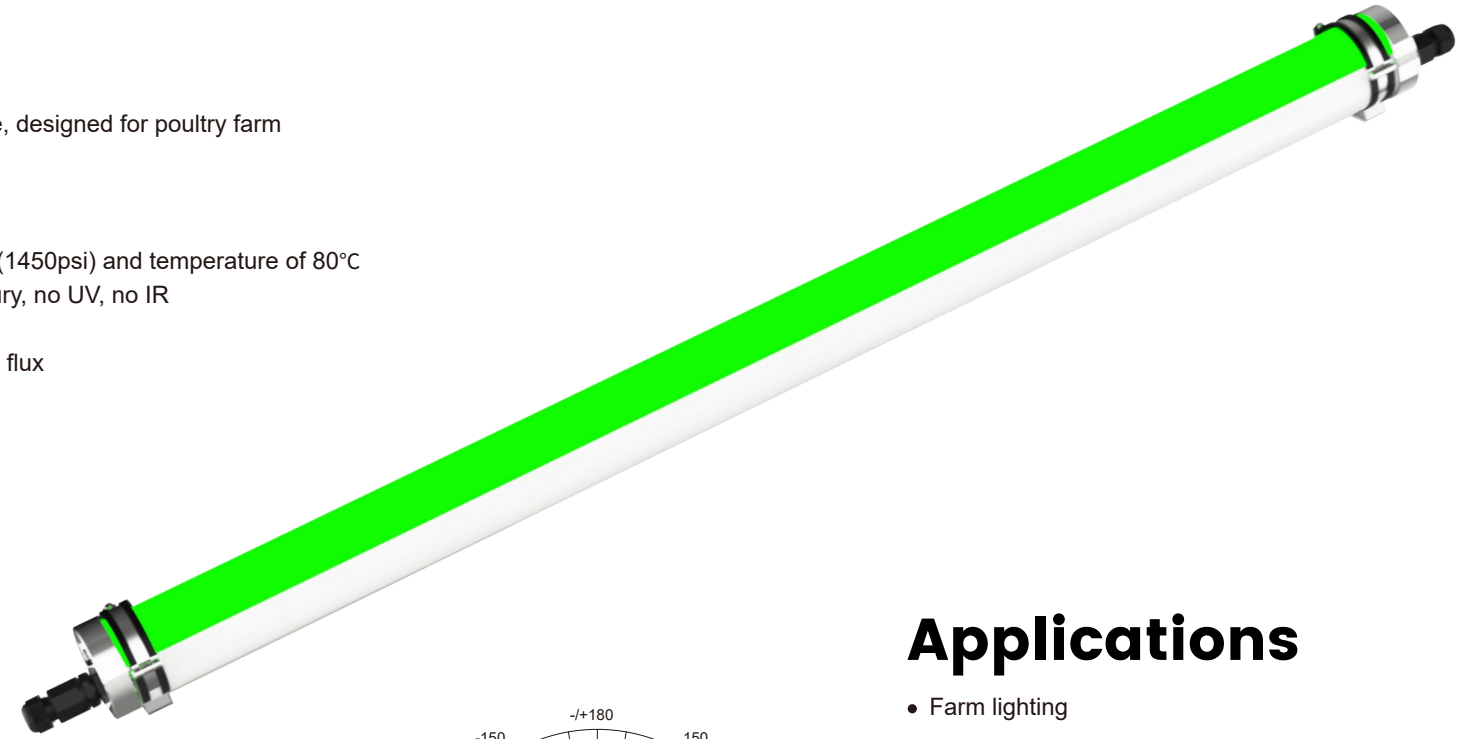

Features

- Red & white 2 in 1 CCT adjustable, designed for poultry farm
- IP67 & IP69K
- PMMA IK08 / PC IK10
- Anti-ammonia
- Against water pressure of 100bar (1450psi) and temperature of 80℃
- Environmentally friendly, no mercury, no UV, no IR
- Wide beam angle 120°
- Quick start instant 100% luminous flux
- 5 years warranty
- Certificate: CE, RoHS certified
- Surface mount or suspended

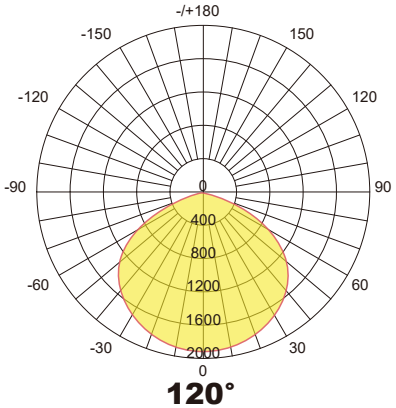

Applications

- Farm lighting

CE | RoHS | 50.000H | IP69K

AC200-240V | -20~+40 | IK10 | RG 0/1 | Dimmable | 5 Year WARRANTY

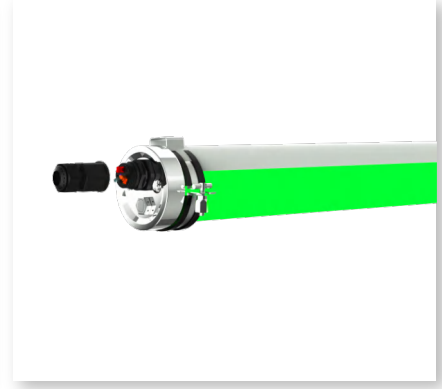

Single Installation

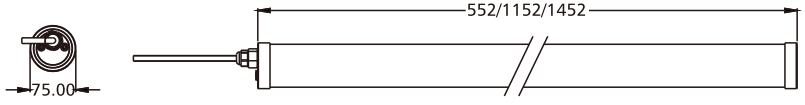

Linkable Installation

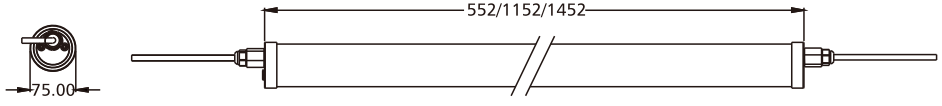

Surface mount

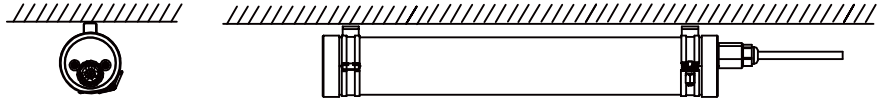

Suspension mount

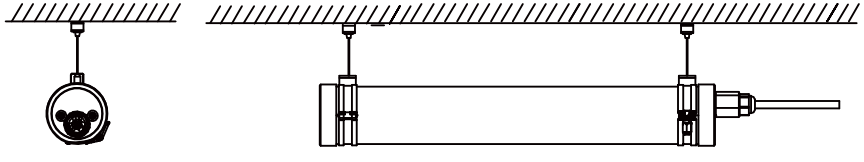

Specifications

Product Code	TBL92F-20W-GR	TBL94F-40W-GR	TBL95F-50W-GR	TBL95F-60W-GR
Power	20W	40W	50W	60W
Input Voltage	200-240VAC/100-277VAC (50/60HZ)			
Input Current	0.09A@220VAC	0.19A@220VAC	0.23A@220VAC	0.28A@220VAC
PF	0.90@220VAC			
Dimming Option	0-10V/Dali			
CCT	520-540nm			
Luminous Flux	2600Lm±5%	5200Lm±5%	6500Lm±5%	7800Lm±5%
Efficiency	130Lm/W±5%			
LED Brand	Lumileds/Hongli 2835			
Beam Angle	120°			
Operation Temp	-20℃~+40℃			
Storage Temp	-20℃~+60℃			
Life Span	Ta 40℃ 50000Hours			
IP Class	IP67 & IP69K			
IK Class	PMMA IK08 / PC IK10			
Certificate	CE, RoHs, CB, IK10, IP69K, ENEC			
Lamp Body Color	Milky PC/PMMA Housing & 304/316 Stainless Steel End Caps			
Product Size (mm)	∅75*552	∅75*1152	∅75*1452	∅75*1452
Packing Size (mm)	730*260*260	1330*260*180	1630*260*180	1630*260*180
Quantity/carton	9PCS	6PCS	6PCS	6PCS
Gross weight (kg) ±0.3	12	15	23	23
Installation mode	Surface Mount / Suspension Mount			

TUBU

Wine Cellar LED Tubular Light

Features

- The specific amber LED module protects wine and champagne against riboflavin effects from photosensitivity
- Certified by the Champagne Committee under the requirements of amber luminaire qualification protocol for bottle storage
- Qualified by an independent laboratory under ISO 17025 for EN13032-4
- IP67 & IP69K
- PMMA IK08 / PC IK10
- Anti-ammonia
- Against water pressure of 100bar (1450psi) and temperature of 80℃
- System efficiency up to 65Lm/w
- 5 years warranty
- Environmentally friendly, no mercury, no UV, no IR
- Wide beam angle 120°
- Quick start instant 100% luminous flux
- Certificate: CE, RoHS certified
- Surface mount or suspended

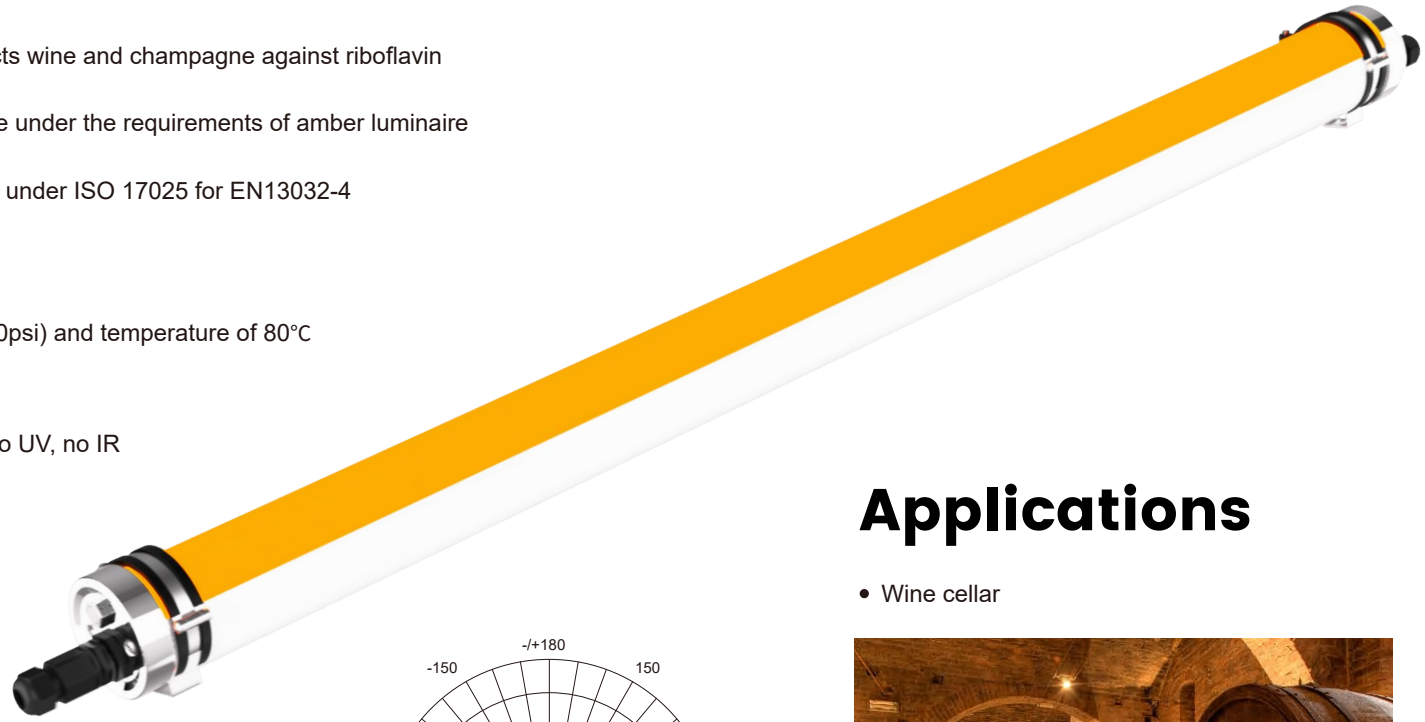

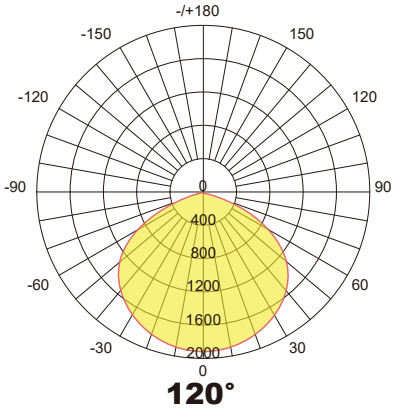

Applications

- Wine cellar

CE CB RoHS 50.000H IP69K

AC200-240V -20~+40 IK10 RG 0/1 Dimmable 5 Year WARRANTY

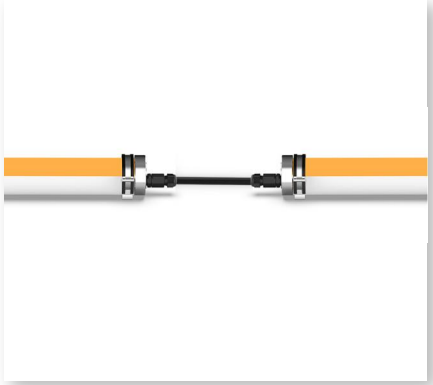

Single Installation

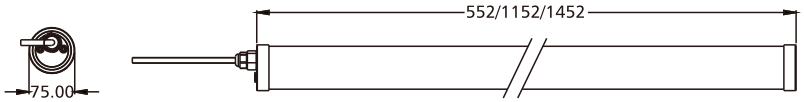

Linkable Installation

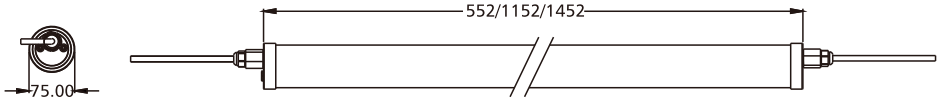

Surface mount

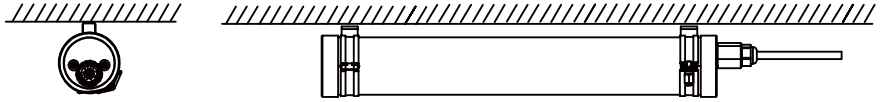

Suspension mount

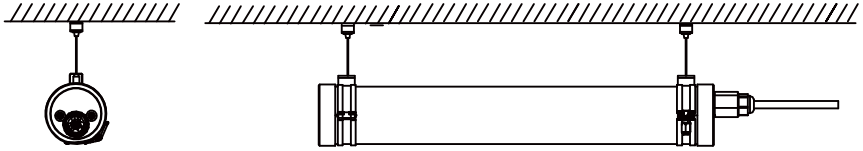

Specifications

Product Code	TBL92F-20W	TBL94F-40W	TBL95F-50W	TBL95F-60W
Power	20W	40W	50W	60W
Input Voltage	200-240VAC / 100-277VAC (50/60Hz)			
Input Current	0.09A@220VAC	0.19A@220VAC	0.23A@220VAC	0.28A@220VAC
PF	0.90@220VAC			
Dimming Option	0-10V / DALI			
CCT	590-595nm			
Luminous Flux	700Lm	1400Lm	1750Lm	2100Lm
Efficiency	35Lm/W±5%			
Luminous Flux	1300Lm	2600Lm	3250Lm	3900 Lm
Efficiency	65Lm/W±5%			
LED Brand	2835 / 3030			
Beam Angle	120°			
Operation Temp	-20℃~+40℃			
Storage Temp	-20℃~+60℃			
Life Span	Ta 40℃ L70>54000 hours			
IP Class	IP67 & IP69K			
IK Class	PMMA IK08 / PC IK10			
Certificate	CE, RoHS, IK10, IP69K			
Lamp Body Color	Milky PC / PMMA housing & 304 / 316 stainless steel end caps			
Product Size (mm)	∅75*552	∅75*1152	∅75*1452	∅75*1452
Packing Size (mm)	730*260*260	1330*260*180	1630*260*180	1630*260*180
Quantity / Carton	9PCS	6PCS	6PCS	6PCS
Gross Weight (kg) ±0.3	13	12	14	14
Installation Mode	Surface mount / Suspension mount			

TUBU

Easy Install LED Tri-proof Light L18

Features

- Easy installation, modular design
- IP65
- PMMA IK08 / PC IK08
- Environmentally friendly, no mercury, no UV, no IR
- System efficiency up to 140Lm/W & 160Lm/W
- High CRI>85
- 5 year warranty
- Wide beam angle 120°
- Quick start instant 100% luminous flux
- Certificate: CE, RoHS, ENEC, CB certified
- Surface mount or suspension mount

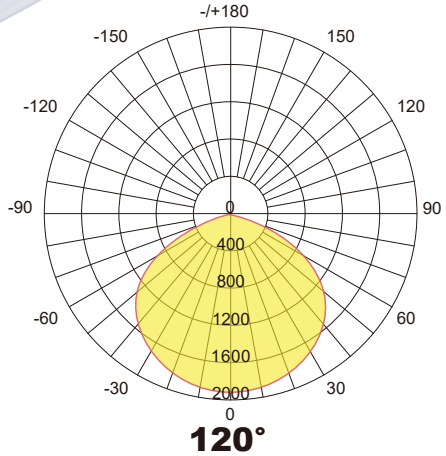

Applications

- Car parks
- Poultry lighting
- Farm lighting
- Port installations
- Railway stations
- Airports
- Inspection pits
- Tunnels

CE RoHS IP65 50.000H Dimmable 5 Year WARRANTY Emergency AC200-240V -20~+40 IK08 RG 0/1

Single Installation

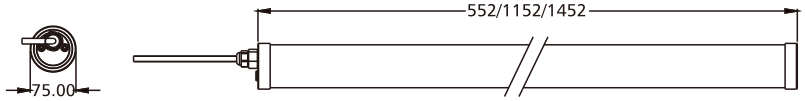

Linkable Installation

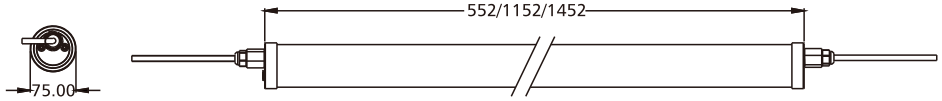

Surface Mount

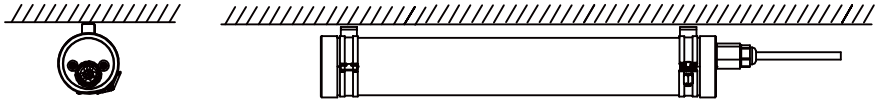

Suspension Mount

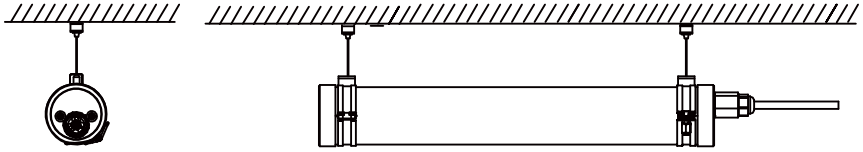

Specifications

Product Code	TBL182F-20W	TBL184F-40W	TBL185F-60W
Power	20W	40W	60W
Input Voltage	200-240VAC / 100-277VAC (50/60Hz)		
Input Current	0.15A@220VAC	0.3A@220VAC	0.4A@220VAC
PF	0.95@220VAC		
Dimming Option	0-10V / DALI		
CCT	2700K / 3000K / 4000K / 5000K / 5700K / 6000K /6500K		
Luminous Flux	2800Lm	5600Lm	8400Lm
Efficiency	140Lm/W±5% (Ra>85)		
Luminous Flux	3200Lm	6400Lm	9600Lm
Efficiency	160Lm/W±5% (Ra>85)		
LED Brand	Lumileds / Hongli 2835		
Beam Angle	120°		
Operation Temp	-20°C~+40°C		
Storage Temp	-20°C~+60°C		
Life Span	Ta 40°C L70>54000 hours		
IP Class	IP65		
IK Class	PMMA IK08 / PC IK08		
Certificate	CE, RoHS, CB, ENEC, IK08, IP65		
Lamp Body Color	Milky PC / PMMA housing & 304 / 316 stainless steel end caps		
Product Size (mm)	Ø75*552	Ø75*1152	Ø75*1452
Packing Size (mm)	730*260*260	1330*260*180	1630*260*180
Quantity / Carton	9PCS	6PCS	6PCS
Gross Weight (kg) ±0.3	13	12	14
Installation Mode	Surface mount / Suspension mount		

TUBU

LED Tri-proof Light L9-360°

Features

- IP40
- PC IK08
- System efficiency up to 100Lm/W
- High CRI>80
- Environmentally friendly, no mercury, no UV, no IR
- Wide beam angle 360°
- Energy efficiency grade: F
- Quick start instant 100% luminous flux
- 5 years warranty on complete fixture (LED's, driver & housing)
- Certificate: CE, RoHs Certified
- Surface Mount or Suspension Mount

Applications

- Office
- Hospital
- Warehouse
- Shopping centre
- Restaurant
- Coffee

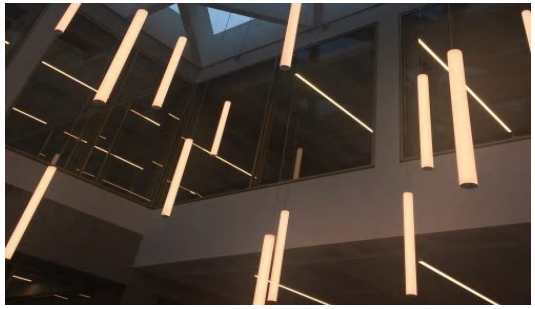

CE CB RoHS D 5 Year WARRANTY

AC200-240V -20~+40 IK10 RG 0/1

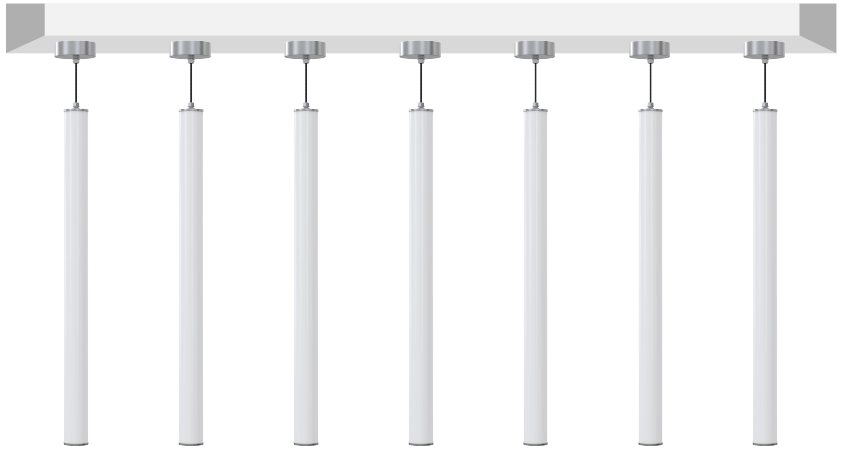

Single Installation

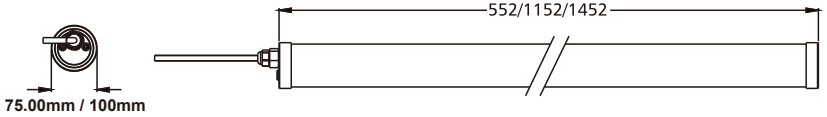

Vertical installation

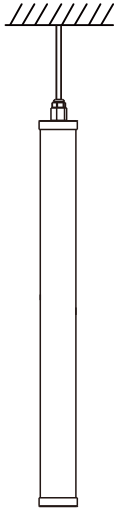

Linkable Installation

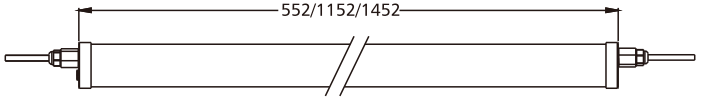

Surface Mount

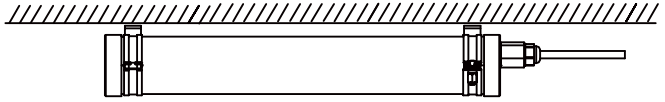

Specifications

Product Code	TBL92F-20W	TBL94F-30W	TBL95F-40W
Power	20W	30W	40W
Input Voltage	200-240VAC (50/60HZ)		
Input Current	0.1A@220VAC	0.21A@220VAC	0.25A@220VAC
PF	0.90@220VAC		
Dimming Option	0-10V / DALI		
CCT	2700K / 3000K / 4000K / 5000K / 5700K / 6000K /6500K		
Luminous Flux	2000Lm	3000Lm	4000Lm
Efficiency	100Lm/W±5%		
LED Brand	Lumileds / Hongli 2835		
Beam Angle	360°		
Operation Temp	-20℃~+40℃		
Storage Temp	-20℃~+60℃		
Life Span	Ta 40℃ L70>54000 hours		
IP Class	IP40		
IK Class	PC IK08		
Certificate	CE, RoHS		
Lamp Body Color	Milky PC		
Product Size (mm)	∅75*552	∅75*1152	∅75*1452
Packing Size (mm)	730*260*260	1330*260*180	1630*260*180
Quantity / Carton	9PCS	6PCS	6PCS
Gross Weight (kg) ±0.3	13	12	14
Installation Mode	Surface mount / Suspension mount		

TUBU

IP66 LED Batten Light L10-K Series Pro

Features

- IP66, IK10
- Stainless steel clips & safety rope
- 5*2.5mm² through wiring
- 130Lm/W, 150Lm/W, 170Lm/W, 185Lm/W system efficiency, CRI>80
- PC cover & PC base (V2)
- Self-test emergency with LiFePO4 battery option
- Microwave sensor options (wireless control)
- Ambient temperatures: -20°C ~ +40°C
- 5 years warranty, CE, RoHS, ENEC, RCM certified
- Options: 1-10V, motion sensor, DALI, emergency
- Surface mount or suspension mount

Applications

- Workshops
- Supermarket
- Warehouse
- Storage
- School lighting
- Car parking lighting

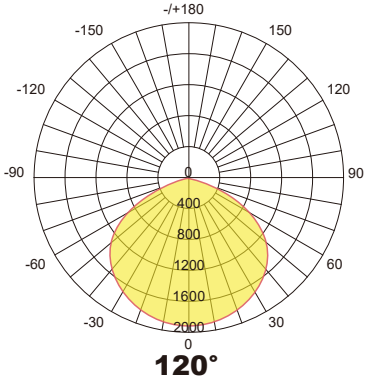

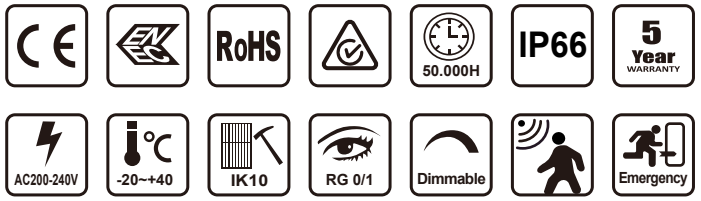

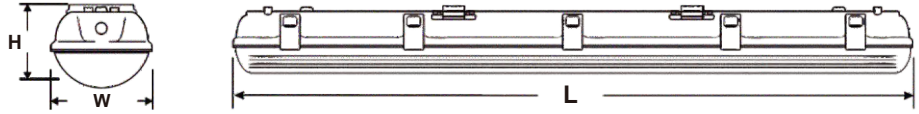

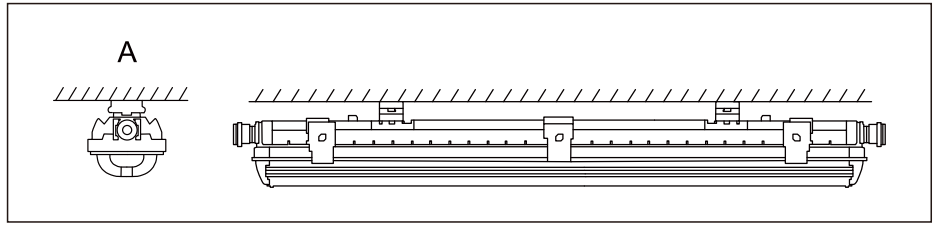

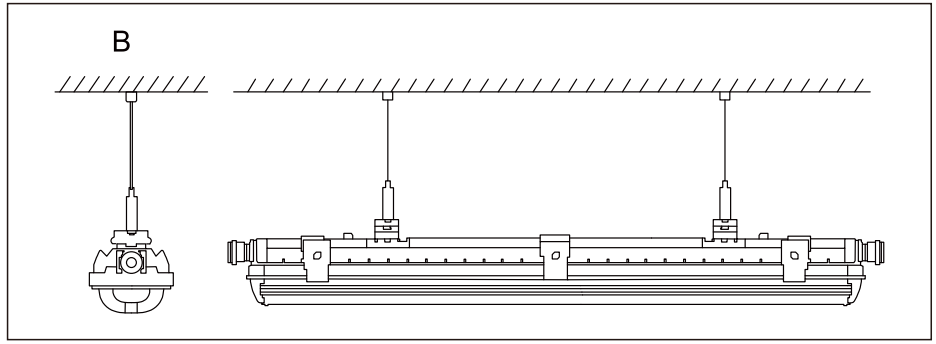

Specifications

Product Code	TBL10A2F-18W-K	TBL10A4F-36W-K	TBL10A5F-50W-K	TBL10A5F-60W-K
Power	18W	36W	50W	60W
Input Voltage	200-240VAC / 100-277VAC (50/60Hz)			
PF	0.9A@220VAC			
Dimming Option	1-10V / DALI, MW sensor, emergency			
CCT	2700K / 3000K / 4000K / 5000K / 5700K / 6000K /6500K			
Luminous Flux	2340Lm / 2700Lm	4680Lm / 5400Lm	6500Lm / 7500Lm	7800Lm / 9000Lm
Efficiency	130Lm/W±5% / 150Lm/W±5% (Ra>80)			
Luminous Flux	3060Lm / 3330Lm	6120Lm / 6660Lm	8500Lm / 9250Lm	10200Lm / 11100Lm
Efficiency	170Lm/W±5% / 185Lm/W±5% (Ra>80)			
LED Brand	Lumileds / Hongli 2835			
Beam Angle	120°			
Operation Temp	-20℃~+40℃			
Storage Temp	-20℃~+60℃			
Life Span	Ta 40℃ L70>54000 hours			
IP Class	IP66			
IK Class	IK10			
Certificate	SAA, RCM, ENEC, CE, RoHS			
Lamp Body Color	PC Base (Grey) + PC Cover (Milky)			
Product Size (mm)	600*95*83	1200*95*83	1500*95*83	1500*95*83
Packing Size (mm)	690*335*300	1290*335*210	1590*335*210	1590*335*210
Quantity / Carton	9PCS	6PCS	6PCS	6PCS
Gross Weight (kg) ±0.3	13	15	19	19
Installation Mode	Surface mount / Suspension mount			

TUBU

IP66 LED Batten Light L10-O Series Eco

Features

- IP66, IK10
- Stainless steel clips
- 130Lm/W, 150Lm/W, 170Lm/W, 185Lm/W system efficiency, CRI>80
- PC milky cover
- Self-test emergency with LiFePO4 battery option
- Microwave sensor options (wireless control)
- Ambient temperature: -20°C ~ +40°C
- 5 years warranty, CE, RoHS certified
- Options: 1-10V, motion sensor, DALI, emergency
- Surface mount or suspension mount

Applications

- Workshops
- Supermarket
- Warehouse
- Storage
- School lighting
- Car parking lighting

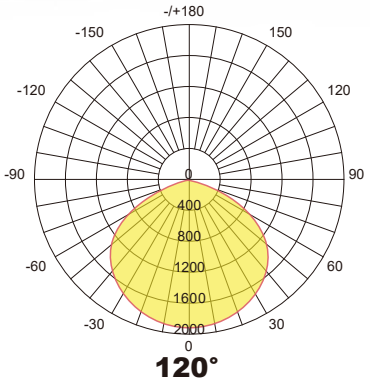

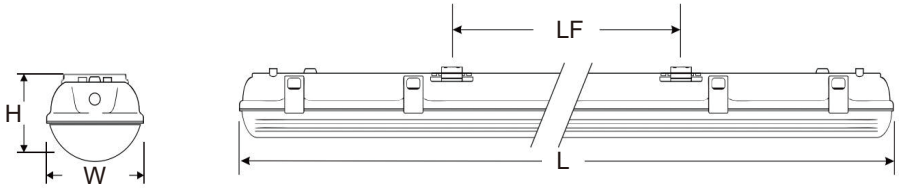

Specifications

Product Code	TBL10A2F-18W-O	TBL10A4F-36W-O	TBL10A5F-50W-O	TBL10A5F-60W-O
Power	18W	36W	50W	60W
Input Voltage	200-240VAC / 100-277VAC (50/60Hz)			
Input Current	0.09A@220VAC	0.23A@220VAC	0.28A@220VAC	0.38A@220VAC
PF	0.90@220VAC			
Dimming Option	1-10V / DALI, MW sensor, emergency			
CCT	2700K / 3000K / 4000K / 5000K / 5700K / 6000K /6500K			
Luminous Flux	2340Lm / 2700Lm	4680Lm / 5400Lm	6500Lm / 7500Lm	7800Lm / 9000Lm
Efficiency	130Lm/W±5% / 150Lm/W±5% (Ra>80)			
Luminous Flux	3060Lm / 3330Lm	6120Lm / 6660Lm	8500Lm / 9250Lm	10200Lm / 11100Lm
Efficiency	170Lm/W±5% / 185Lm/W±5% (Ra>80)			
LED Brand	Hongli 2835			
Beam Angle	120°			
Operation Temp	-20℃~+40℃			
Storage Temp	-20℃~+60℃			
Life Span	Ta 40℃ L70>54000 hours			
IP Class	IP66			
IK Class	IK10			
Certificate	CE, RoHS, IK08, IP66			
Lamp Body Color	PC Base (Grey) + PC Cover (Milky)			
Product Size (mm)	600*80*72	1200*80*72	1500*80*72	1500*80*72
Packing Size (mm)	650*290*430	1250*290*260	1550*290*260	1550*290*260
Quantity / Carton	15PCS	9PCS	9PCS	9PCS
Gross Weight (kg) ±0.3	19	18	21	21
Installation Mode	Surface mount / Suspension mount			

TUBU

LED Tri-proof Light L10-G

Features

- IP66, GRP IK08
- Glass fiber reinforced plastics
- System efficiency up to 140lm/W & 160lm/W
- High CRI >80
- Environmentally friendly, no mercury, No UV, No IR
- Wide beam angle 120°
- Energy efficiency Grade:C
- Quick start instant 100% luminous flux
- 5 year warranty on complete fixture. (LED's, Driver, & housing)
- Certificate: CE, RoHs certified
- Surface mount or suspension mount

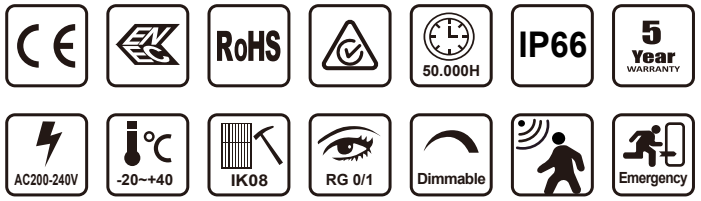

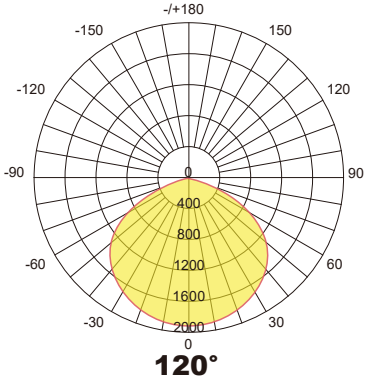

Applications

- Car parks
- Poultry lighting
- Farm lighting
- Railway stations
- Airports
- Inspection pits

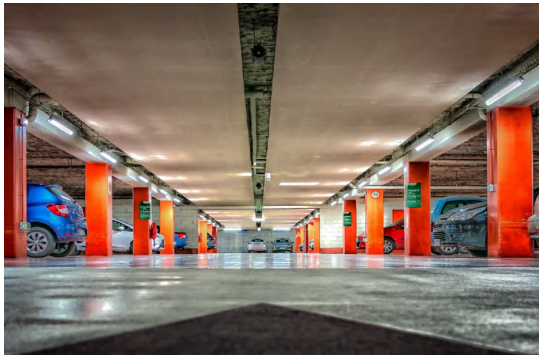

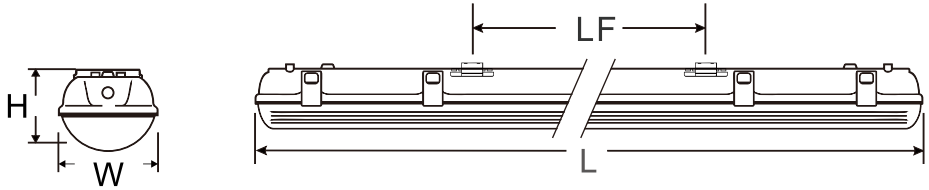

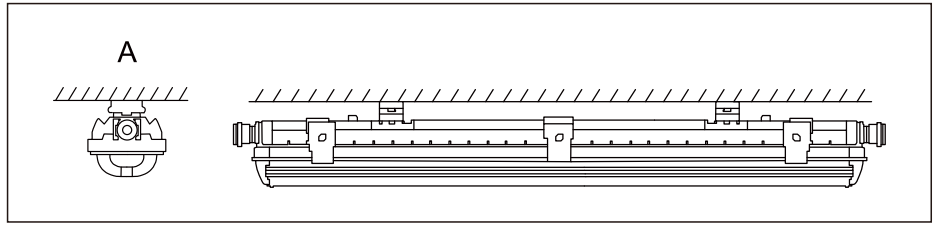

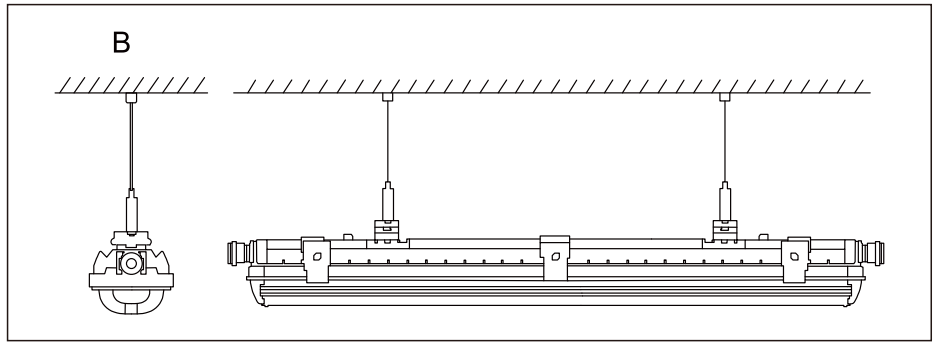

Specifications

Product Code	TBL10A4F-40W-G	TBL10A4F-100W-G
Power	40W	100W
Input Voltage	200-240VAC/100-277VAC (50/60HZ)	
PF	0.95@220VAC	
Dimming Option	0-10V/Dali	
CCT	2700-6500K	
Luminous Flux	5600Lm±5%	14000Lm±5%
Efficiency	140Lm/W±5% (Ra>80)	
Luminous Flux	6400Lm±5%	16000Lm±5%
Efficiency	160Lm/W±5% (Ra>80)	
LED Brand	Lumileds / Hongli 2835	
Beam Angle	120°	
Operation Temp	-20℃~+40℃	
Storage Temp	-20℃~+60℃	
Life Span	Ta 40℃ 50000 hours	
IP Class	IP66	
IK Class	IK08	
Certificate	CE, RoHs, CB, IK08, IP66	
Lamp Body Color	Milky white GRP	
Product Size (mm)	1200*125*92	1200*260*105
Packing Size (mm)	1280*280*310	1250*280*110
Quantity / Carton	6PCS	1PCS
Gross Weight (kg) ±0.3	25.6kg	8.2kg
Installation Mode	Surface mount / Suspension mount	

TUBU

IP66 LED Batten Light L10-S Series Pro

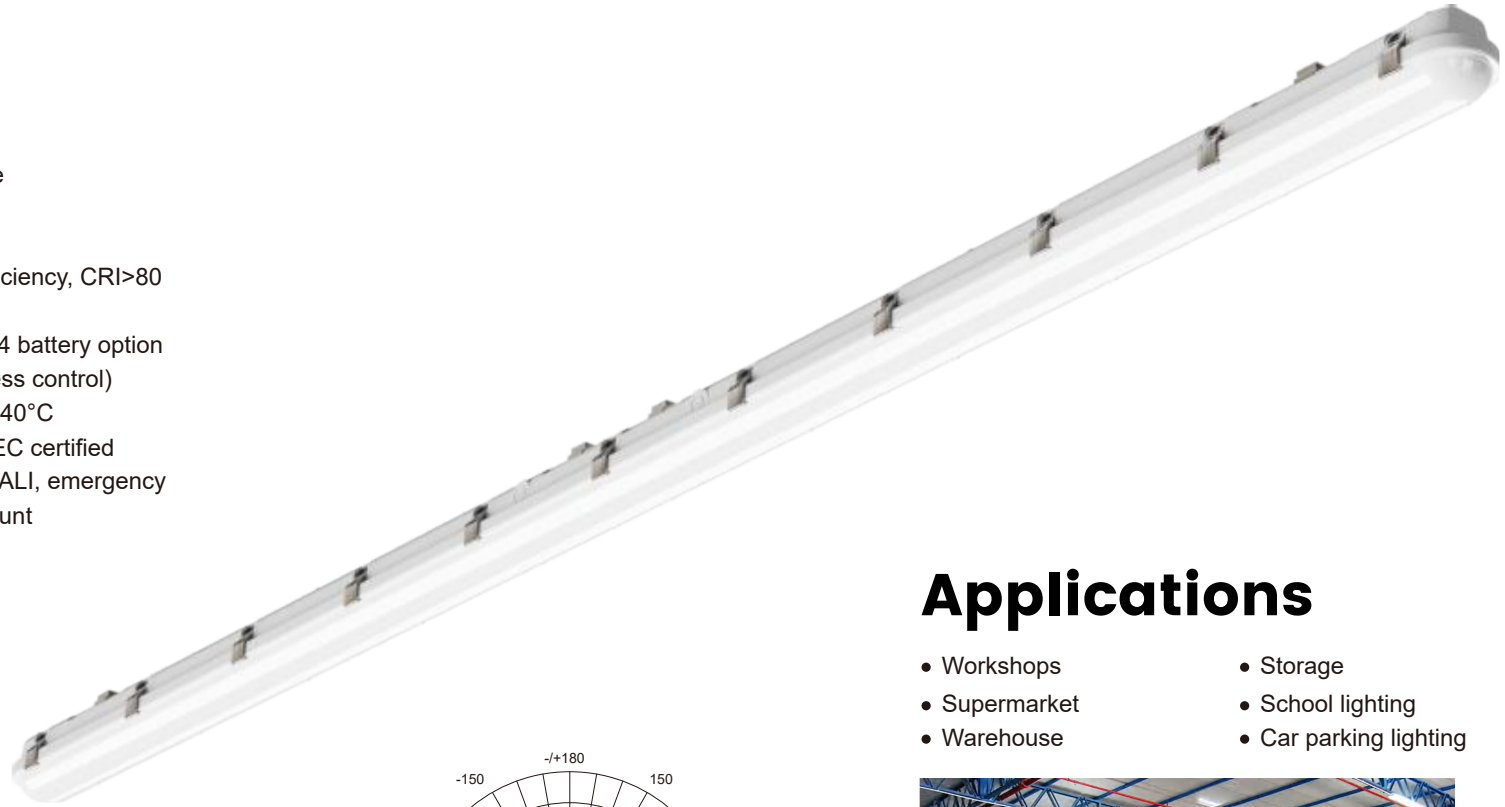

Features

- IP66, IK10
- Stainless steel clips & safety rope
- 5*2.5mm² through wiring
- Isolated flicker free driver
- 140Lm/W ~ 160Lm/W system efficiency, CRI>80
- PC cover & PC base (V2)
- Self-test emergency with LiFePO4 battery option
- Microwave sensor options (wireless control)
- Ambient temperatures: -20°C ~ +40°C
- 5 years warranty, CE, RoHS, ENEC certified
- Options: 0-10V, motion sensor, DALI, emergency
- Surface mount or suspension mount

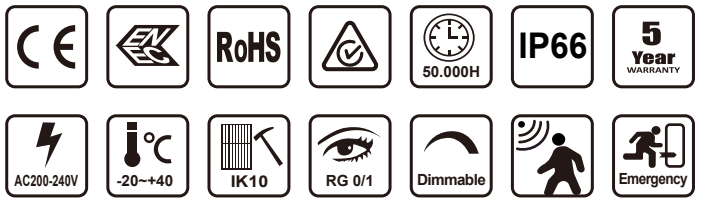

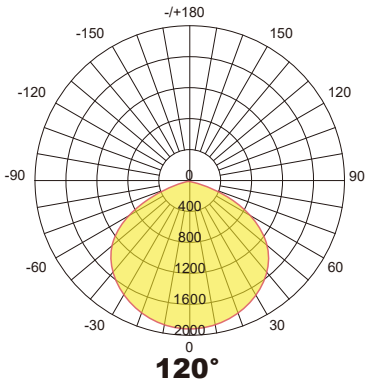

Applications

- Workshops
- Supermarket
- Warehouse
- Storage
- School lighting
- Car parking lighting

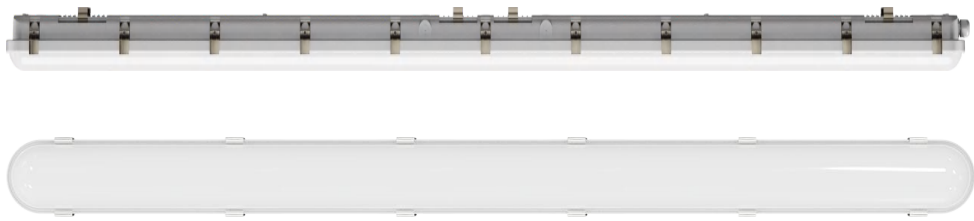

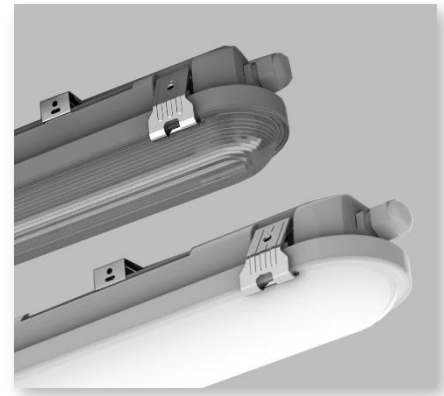

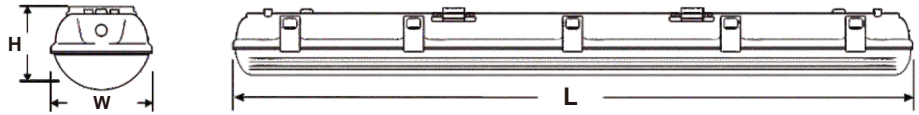

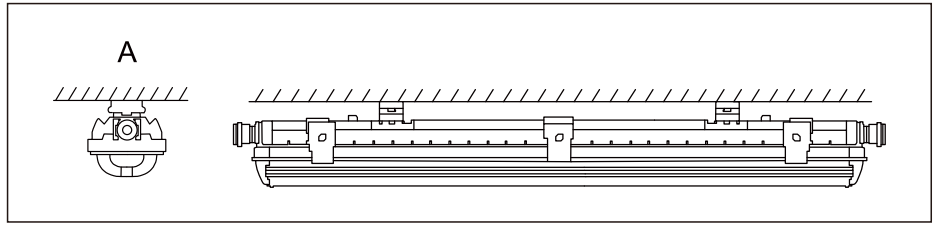

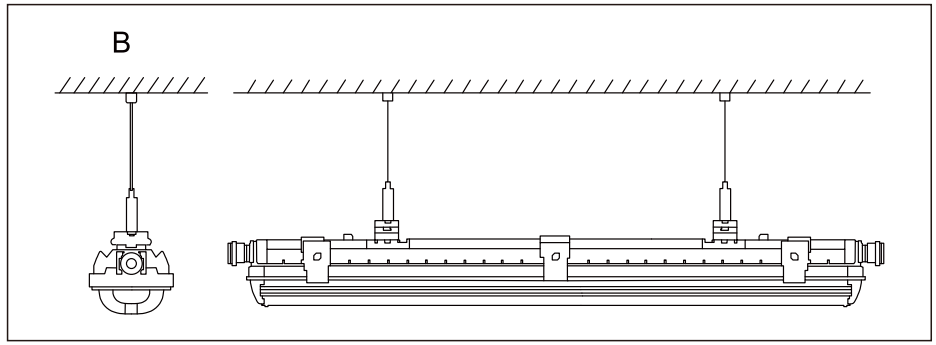

Specifications

Product Code	TBL10A2F-20W-S	TBL10A4F-40W-S	TBL10A5F-50W-S	TBL10A5F-60W-S
Power	20W	40W	50W	60W
Input Voltage	200-240VAC / 100-277VAC (50/60Hz)			
PF	0.9A@220VAC			
Dimming Option	0-10V / DALI, MW sensor, emergency			
CCT	2700K / 3000K / 4000K / 5000K / 5700K / 6000K /6500K			
Luminous Flux	2800Lm	5600Lm	7000Lm	8400Lm
Efficiency	140Lm/W±5% (Ra>80)			
Luminous Flux	3200Lm	6400Lm	8000Lm	9600Lm
Efficiency	160Lm/W±5% (Ra>80)			
LED Brand	Lumileds / Hongli 2835			
Beam Angle	120°			
Operation Temp	-20℃~+40℃			
Storage Temp	-20℃~+60℃			
Life Span	Ta 40℃ L70>54000 hours			
IP Class	IP66			
IK Class	IK10			
Certificate	ENEC, CE, RoHS			
Lamp Body Color	PC Base (Grey) + PC Cover (Milky)			
Product Size (mm)	600*95*80	1200*95*83	1500*95*83	1500*95*83
Packing Size (mm)	690*335*300	1290*335*210	1590*335*210	1590*335*210
Quantity / Carton	9PCS	6PCS	6PCS	6PCS
Gross Weight (kg) ±0.3	13	15	19	19
Installation Mode	Surface mount / Suspension mount			

TUBU

IP65 LED Batten Light L10-H1/L10-H2 Series

Features

- IP65
- PC IK10 / glass IK07
- Stainless steel clips
- Boke isolated flicker free driver
- 130Lm/W system efficiency, CRI>80 (Honglitronic brand leds)
- tempered glass, metal bottom shell
- Self-test emergency with LiFePO4 battery optional
- Microwave sensor options (wireless control)
- Ambient temperatures: -20°C to + 40°C
- Options: 0-10V, Motion Sensor, DALI, Emergency
- 5 years warranty on complete fixture (LED's, Driver & Housing)
- Certificate: CE, RoHs Certified
- Surface Mount or Suspension Mount

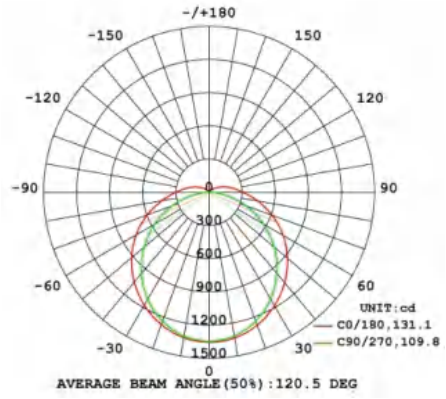

Applications

- Car parking Lighting
- School Lighting
- Workshops
- Supermarket
- Warehouse
- Storage

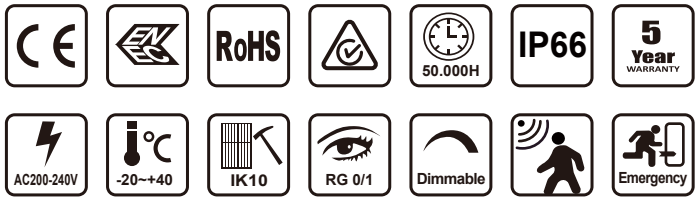

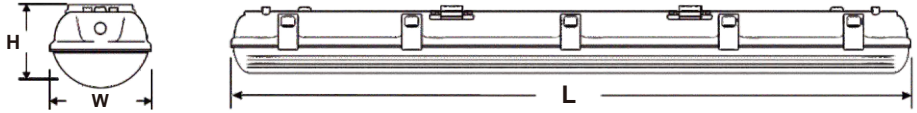

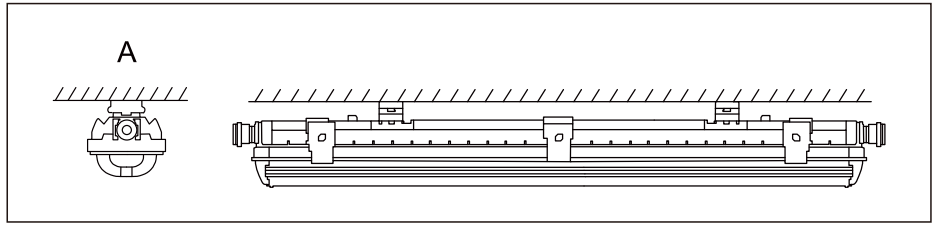

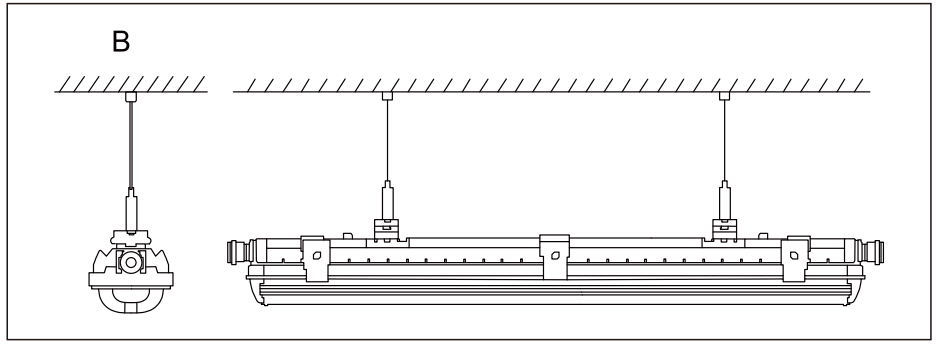

Specifications

Product Code	TBL10H12F-18W	TBL10H14F-36W	TBL10H15F-50W	TBL10H15F-60W
Power	18W	36W	50W	60W
Input Voltage	200-240VAC/100-277VAC (50/60HZ)			
PF	0.90@220VAC			
Dimming Option	0-10V/Dali			
CCT	2700K / 3000K / 4000K / 5000K / 5700K / 6000K /6500K			
Luminous Flux	2340Lm	4680Lm	6500Lm	7800Lm
Efficiency	130Lm/W±5% (Ra>80)			
LED Brand	Lumileds / Hongli 2835			
Beam Angle	120°			
Operation Temp	-20℃~+40℃			
Storage Temp	-20℃~+60℃			
Life Span	Ta 40℃ L70>54000 hours			
IP Class	IP65			
IK Class	PC IK10 / glass IK07			
Certificate	CE, RoHS			
Lamp Body Color	tempered glass，metal bottom shell			
Product Size (mm)	700*140*90	1300*140*90	1600*140*90	1600*140*90
Packing Size (mm)	750*195*145	1350*195*145	1650*195*145	1650*195*145
Quantity / Carton	1PCS	1PCS	1PCS	1PCS
Gross Weight (kg) ±0.3	3.6	5.4	7.3	7.3
Installation Mode	Surface mount / Suspension mount			

TUBU

Toolless LED Tri-proof Light L11

Features

- IP65 & IK08
- Wireless control: microwave sensor, PIR sensor, Zhaga socket
- 3 core & 5 core through wiring
- Dial to adjusting power and color temperature
- Housing material: PC
- System efficiency up to 140Lm/W & 160Lm/W
- High CRI>85
- Environmentally friendly, no mercury, no UV, no IR
- Wide beam angle 120°
- 5 years warranty
- Quick start instant 100% luminous flux
- Certificate: CE, RoHS, ENEC, CB certified
- Surface mount or suspension mount

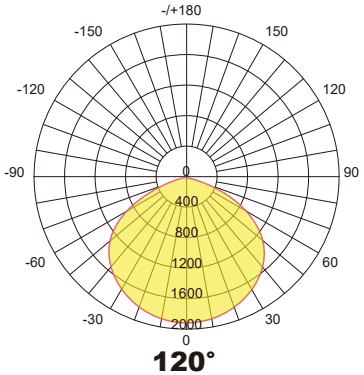

Applications

- Workshops
- Supermarket
- Warehouse
- Walkway
- School lighting
- Car parking lighting

Single Installation

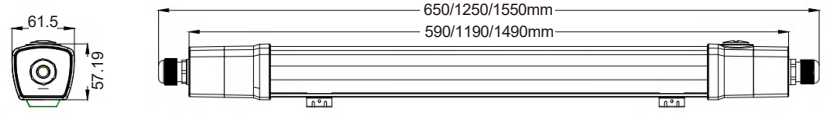

Linkable Installation

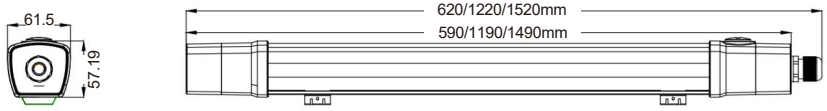

Surface Mount

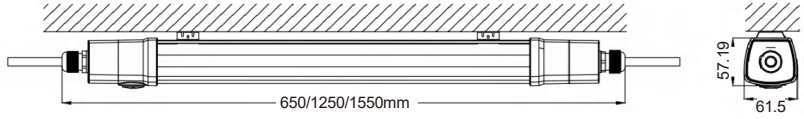

Suspension Mount

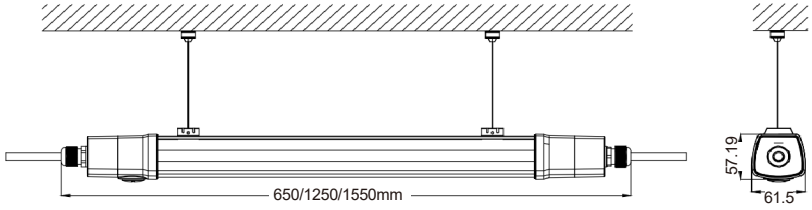

Specifications

Product Code	TBL11P2F-25W	TBL11P4F-35W	TBL11P5F-45W
Power	25W (25W/21W/18W/15W)	35W (35W/30W/25W/20W)	45W (45W/38W/32W/25W)
Input Voltage	200-240VAC / 100-277VAC (50/60Hz)		
Input Current	0.12A@220VAC	0.18A@220VAC	0.23A@220VAC
PF	0.90@220VAC		
Dimming Option	0-10V / DALI		
CCT	2700K / 3000K / 4000K / 5000K / 5700K / 6000K /6500K		
Luminous Flux	3500Lm	4900Lm	6300Lm
Efficiency	140Lm/W±5% (Ra>85)		
Luminous Flux	4000Lm	5600Lm	7300Lm
Efficiency	160Lm/W±5% (Ra>85)		
LED Brand	Lumileds / Hongli 2835		
Beam Angle	120°		
Operation Temp	-20°C~+40°C		
Storage Temp	-20°C~+60°C		
Life Span	Ta 40°C L70>54000 hours		
IP Class	IP65		
IK Class	PC IK08		
Certificate	CE, RoHS, IK08, ENEC, CB		
Lamp Body Color	Milky PC		
Product Size (mm)	650*58*62	1250*58*62	1550*58*62
Individual Package Size (mm)	660*65*65	1260*65*65	1560*65*65
Packing Size (mm)	680*215*215	1280*215*215	1580*215*215
Quantity / Carton	9PCS	9PCS	9PCS
Gross Weight (kg) ±0.3	12	12	14
Installation Mode	Surface mount / Suspension mount		

TUBU

LED Linear Low Bay Light L1

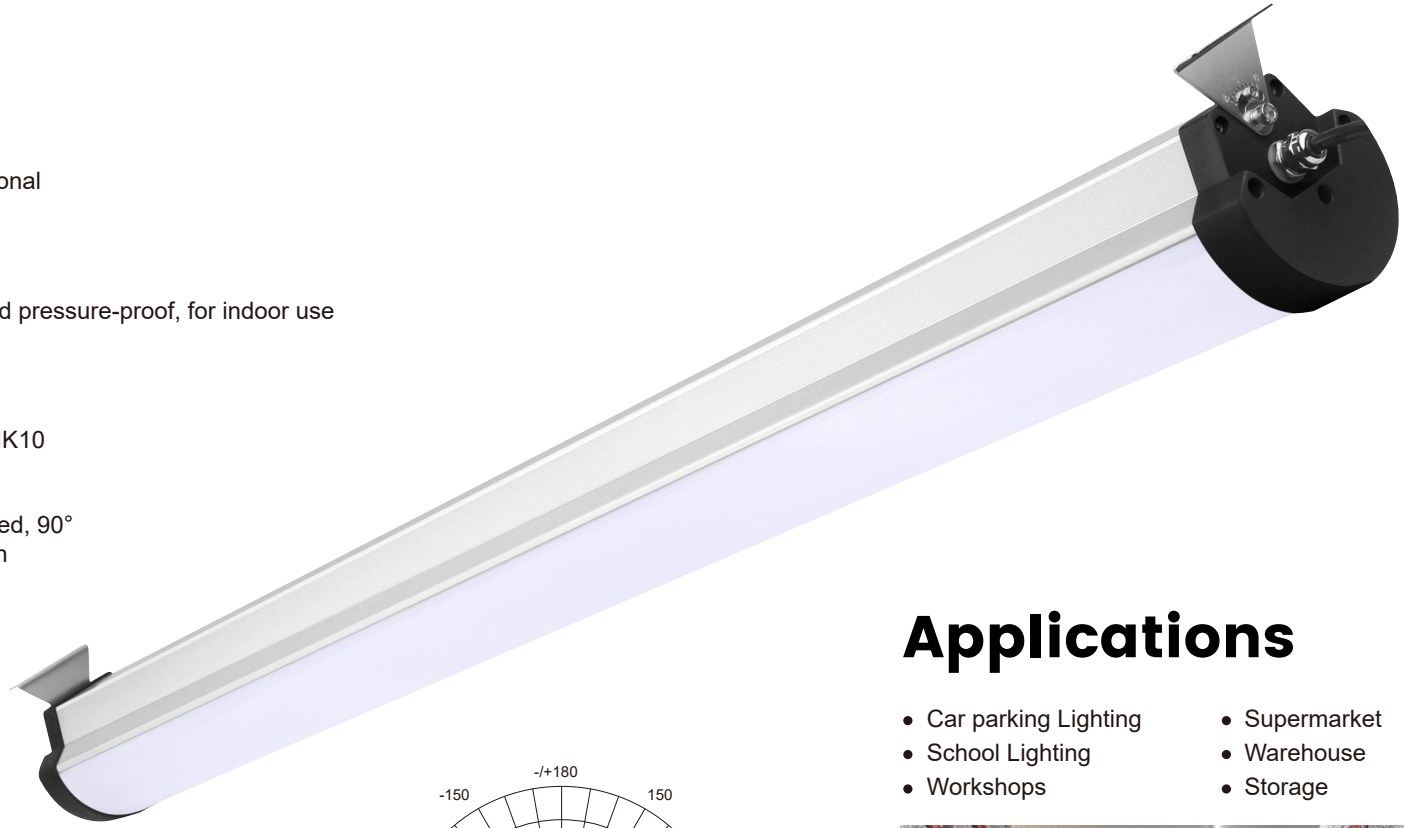

Features

- 140Lm/W standard, 170Lm/W optional
- High CRI>80
- Wide beam angle 160°
- IP65 waterproof, dust corrosion and pressure-proof, for indoor use
- Aluminium housing & PC cover
- 5 years warranty
- Certificate: CE, RoHS, ETL, DLC, IK10
- Optional: 0-10V, DALI dimming
- Hanging mount accessories included, 90° adjustable mounting clips for option

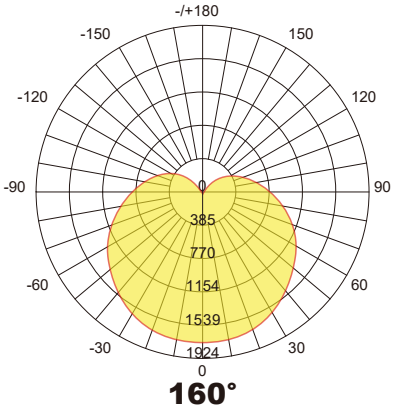

Applications

- Car parking Lighting
- School Lighting
- Workshops
- Supermarket
- Warehouse
- Storage

CE | ETL Intertek 5008748 | RoHS | 50.000H | IP65 | Dimmable | 5 Year Warranty | AC200-240V | -20~+40 | IK10 | RG 0/1 | Emergency

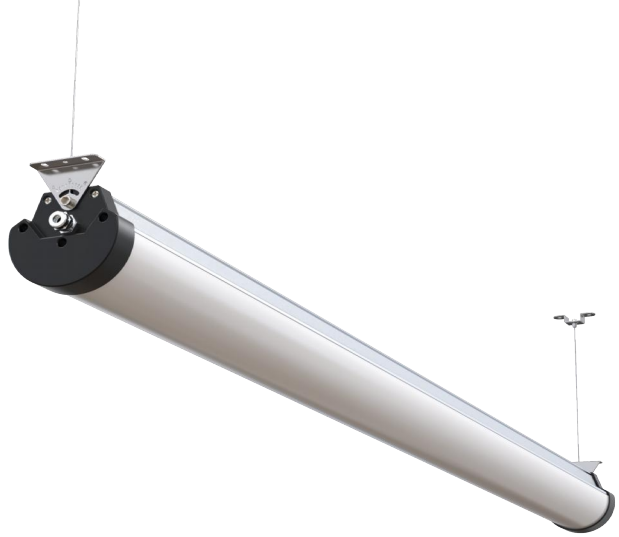

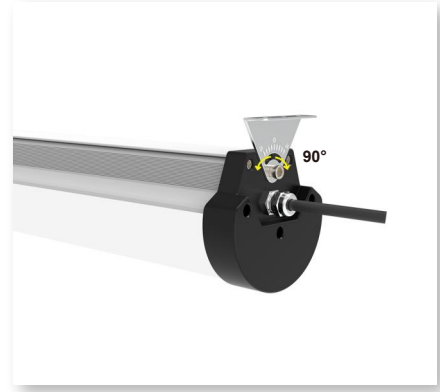

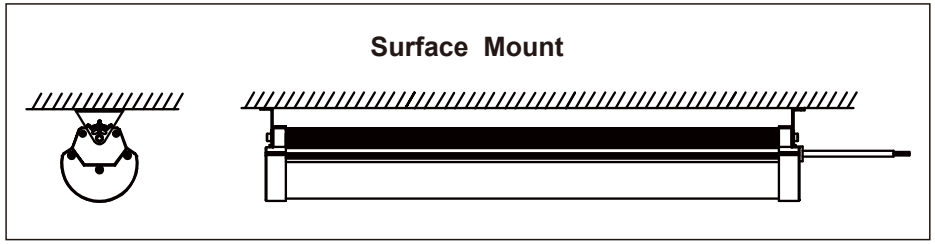

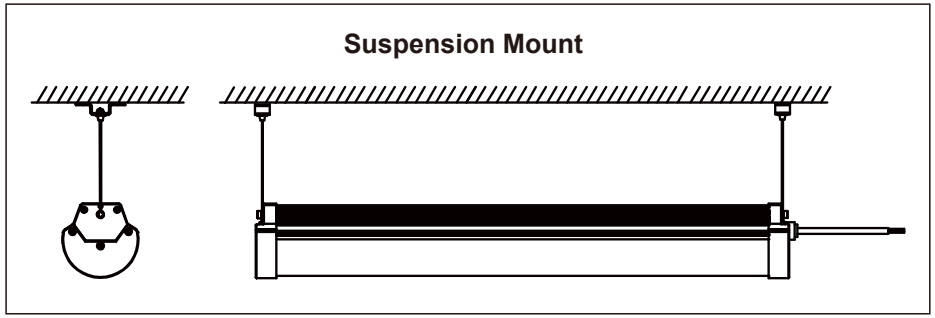

Specifications

Product Code	TBF2F-20W	TBF4F-40W	TBF4F-60W	TBF5F-60W	TBF5F-80W	TBF5F-100W
Power	20W	40W	60W	60W	80W	100W
Input Voltage	200-240VAC / 100-277VAC (50/60Hz)					
PF	0.90@220VAC					
Dimming Option	0-10V / DALI					
CCT	2700K / 3000K / 4000K / 5000K / 5700K / 6000K /6500K					
Luminous Flux	2800Lm	5600Lm	8400Lm	8400Lm	11200Lm	14000Lm
Efficiency	140Lm/W±5% (Ra>80)					
Luminous Flux	3400Lm	6800Lm	10200Lm	10200Lm	13600Lm	17000Lm
Efficiency	170Lm/W±5% (Ra>80)					
LED Brand	Lumileds / Hongli 2835					
Beam Angle	160°					
Operation Temp	-20℃~+40℃					
Storage Temp	-20℃~+60℃					
Life Span	Ta 40℃ L70>54000 hours					
IP Class	IP65					
IK Class	IK10					
Certificate	CE, RoHS, DLC, ETL					
Lamp Body Color	Silver aluminium housing + Milky PC cover					
Product Size (mm)	600*105*127	1200*105*127		1500*105*127		
Packing Size (mm)	690*245*245	1290*245*245		1590*245*245		
Quantity / Carton	4PCS	4PCS		4PCS		
Gross Weight (kg) ±0.3	15	19		19		
Installation Mode	Surface mount / Suspension mount					

LED High Bay

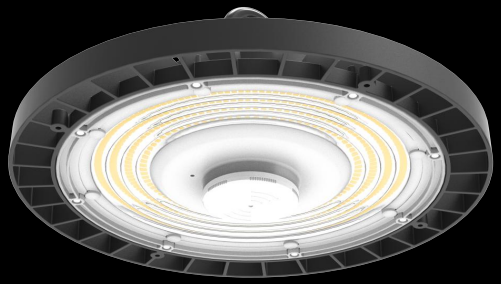

Smart LED High Bay Light F12
PAGE 59-60

Low glare UFO high bay light specif ication
PAGE 61-62

Ufo Led High Bay Light
PAGE 63-64

LED High Bay Light
PAGE 65-66

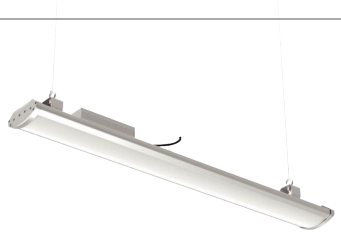

LED Linear High Bay Light G1
PAGE 67-68

LED Linear High Bay Light G2
PAGE 69-70

UGR<19 LED Linear High Bay Light G2 DXG
PAGE 71-72

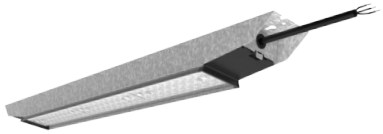

LED Linear Industrial Light L16
PAGE 73-74

TUBU

Smart LED High Bay Light F12

Features

- Wattage: 200W (dimming to 150W / 100W)
- Color temperature adjustable
- Lighting efficiency: 150Lm/W (Ra80) / 170Lm/W (Ra80) / 190Lm/W (Ra70)
- Beam angle: 60° / 90° / 120°
- Protection grade: IP65 IK08
- Operation environment: -40°C ~ 50°C, life span 50,000 hours
- Power protection: short circuit protection / overvoltage protection / over temperature protection
- Dimming control: 0-10V / PWM
- Installation: suspension mount / wall mount
- Controller selecting: single lamp microwave sensors / group microwave

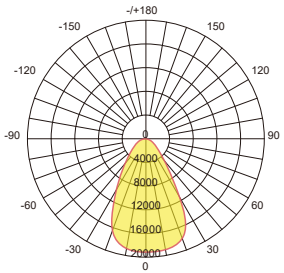

60°

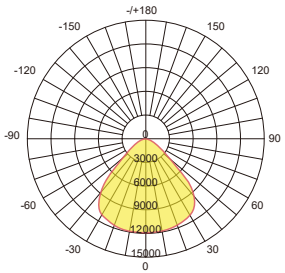

90°

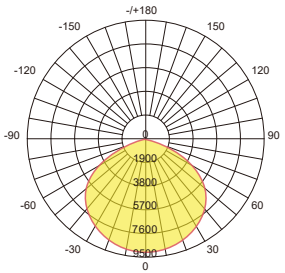

120°

Applications

- Sports lighting
- Storage
- Warehouse

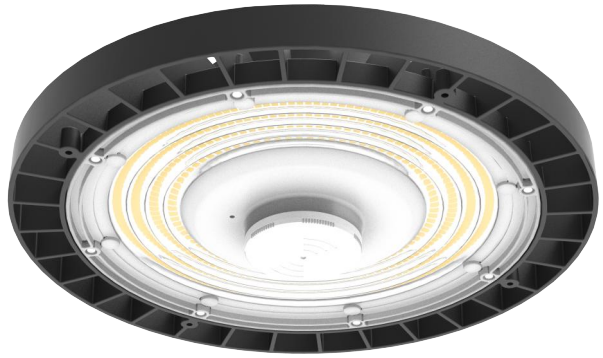

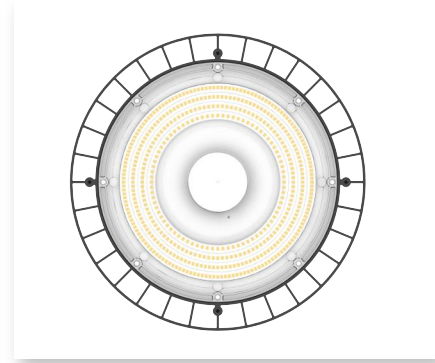

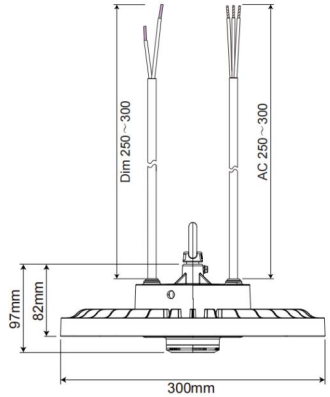

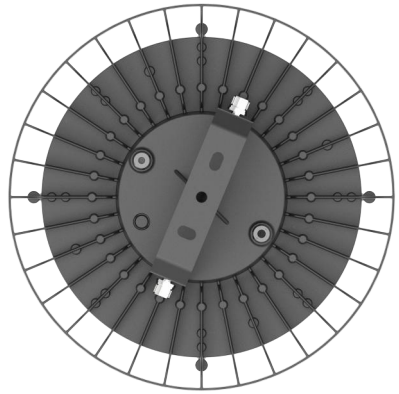

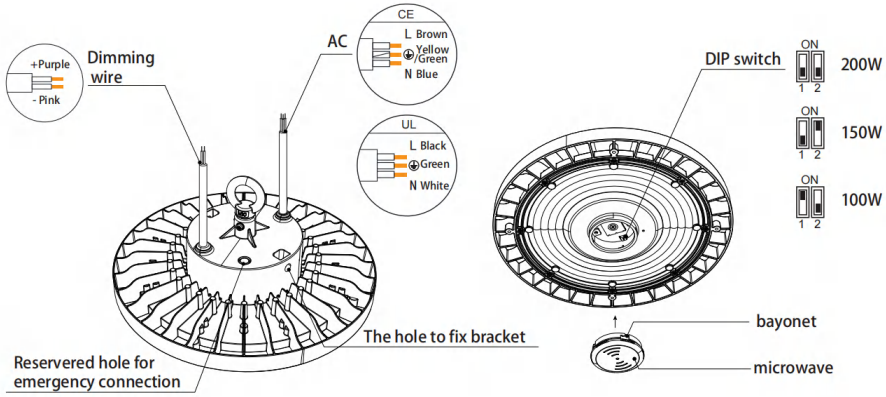

Specifications

Product Code	TBF12-200W
Power	200W (adjustable 150W / 100W)
Input Voltage	100-277VAC (50/60Hz)
Input Current	0.91A / 220VAC
PF	0.95@220VAC
Dimming	3 in dimming (PWM, 0-10V, resistor), Power dial or internal microwave controller
Dimming DC 12V Driver	12VDC±10%, Max current 200mA（Dimming：External control and built-in microwave control can only be used, only use in 12V）
CCT	4000K / 5000K / 5700K
Luminous Flux	30000Lm
Efficiency	150Lm/W±10% (Ra>80 5000K)
Luminous Flux	34000Lm
Efficiency	170Lm/W±5% (Ra>80 5000K)
Luminous Flux	38000Lm
Efficiency	190Lm/W±5% (Ra>70 5000K)
Light Type	SMD 3030 or SMD 2835
Working Temperature	-40~+50°C
Storage Temperature and Humidity	-40～85℃，10～95% RH non-condensing
Life Span	50000 hours
Surge Lighting Stroke	6KV / 10KV
IP/IK Class	IP65 / IK08
Certificate	CE, RoHS
Materials Color	Housing: die-casting aluminium Housing color: Black (RAL9005) Optics lens: PC
Product Size (mm)	∅300*102
Packing Size (mm)	360*145*340
Quantity / Carton	1PCS
Gross Weight (kg) ±0.3	4.2
Installation Mode	Suspending / wall mounted (reference the instruction)

TUBU

Low Glare UFO High Bay Light

Features

- Whole light efficiency: 140LM/W
- LED Brand: LUMILEDS
- Color tolerance: SDCM<5
- Anti-glare value: UGR<22
- Beam agnle: 60°(PC lens + transparent glass cover)
- IP grade: IP65
- Control mode (optional): 1-10V dimming/microwave sensor/zigbee control system
- Installation method: hanging ring & bracket
- Warranty: 5 years

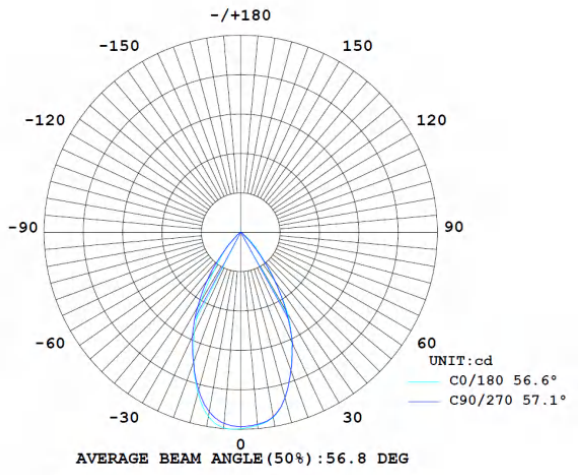

Applications

- Warehouses
- Factories
- Supermarkets
- Hospitals
- Gymnasiums
- Toll stations

CE | 50.000H | IP65 | Dimmable | 5 Year WARRANTY

AC100-277V | -30~+50 | IK08 | RG 0/1 | Emergency

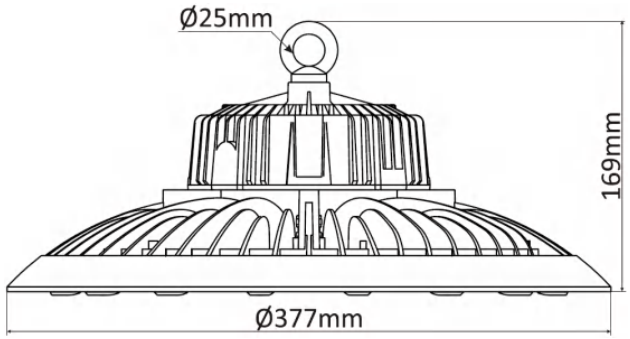

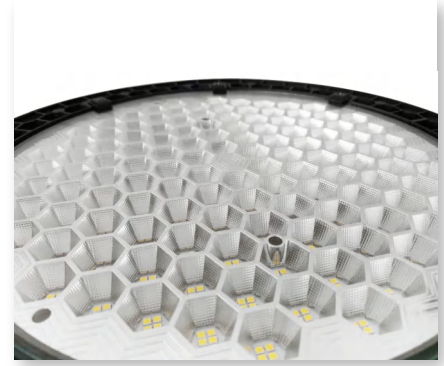

UGR Test Data

Uncorrected UGR Table

Report number:

MANUFACTURER:	Address:	
NAME:	TYPE:	WEIGHT:
SPECIFICATION:	DIMENSION:	SERIAL No.:

ceiling/cavity	0.7	0.7	0.5	0.5	0.3	0.7	0.7	0.5	0.5	0.3
walls	0.5	0.3	0.5	0.3	0.3	0.5	0.3	0.5	0.3	0.3
working plane	0.2	0.2	0.2	0.2	0.2	0.2	0.2	0.2	0.2	0.2
Room dimensions	Viewed crosswise					Viewed endwise				
x = 2H y = 2H	18.8	19.7	19.0	19.9	20.1	19.2	20.2	19.5	20.4	20.5
3H	18.6	19.5	18.9	19.7	19.9	19.1	20.0	19.3	20.2	20.4
4H	18.5	19.4	18.8	19.6	19.8	19.0	19.8	19.3	20.1	20.3
6H	18.4	19.2	18.7	19.5	19.7	18.9	19.7	19.2	19.9	20.2
8H	18.4	19.1	18.7	19.4	19.7	18.9	19.6	19.2	19.9	20.1
12H	18.4	19.1	18.7	19.3	19.6	18.8	19.5	19.1	19.8	20.1
4H 2H	18.5	19.4	18.8	19.6	19.8	19.0	19.8	19.3	20.1	20.3
3H	18.4	19.1	18.7	19.4	19.6	18.8	19.5	19.2	19.8	20.1
4H	18.3	18.9	18.6	19.2	19.5	18.7	19.4	19.1	19.7	20.0
6H	18.2	18.8	18.6	19.1	19.4	18.6	19.2	19.0	19.6	19.9
8H	18.1	18.7	18.5	19.0	19.4	18.6	19.1	19.0	19.5	19.8
12H	18.1	18.6	18.5	18.9	19.3	18.6	19.0	19.0	19.4	19.8
8H 4H	18.1	18.7	18.5	19.0	19.4	18.6	19.1	19.0	19.5	19.8
6H	18.0	18.5	18.5	18.9	19.3	18.5	18.9	18.9	19.3	19.7
8H	18.0	18.4	18.4	18.8	19.2	18.5	18.8	18.9	19.2	19.7
12H	17.9	18.3	18.4	18.7	19.2	18.4	18.7	18.9	19.2	19.6

Specifications

Product Code	TBF16-100	TBF16-150	TBF16-200
Power	100W	150W	200W
Input Voltage	100-277 VAC; 50Hz/60Hz		
Exterior Color	Black / Grey		
Power Supply Efficiency	>93%		
Power Factor	PF>0.90		
Energy Saving Level	D		
CCT	3000K/4000K/5000K/5700K/6500K		
Luminous Flux	14,000Lm	21,000Lm	28,000Lm
LED Luminous Efficiency	140 lm/w		
Color Rendering Index CRI	Ra≥70 (Ra≥80)		
Lamp Material	Aluminum/Clear Tempered Glass/PC		
Color Tolerance SDCM	<5		
Start Time	<0.2S		
Working Temperature	-30°C ~+50°C		
Humidity	10% ~ 90% RH		
Life Span	50000 hours		

TUBU

UFO LED High Bay Light

Features

- AC85-305V/AC165-265V
- Famous brand 2835/3030 1W SMD light source.
- Die-casting aluminum body.
- Anti-corrosion powder painting.
- IP65 Waterproof for outdoor use.
- 3 or 5 years warranty optional.
- Export certificates are available.

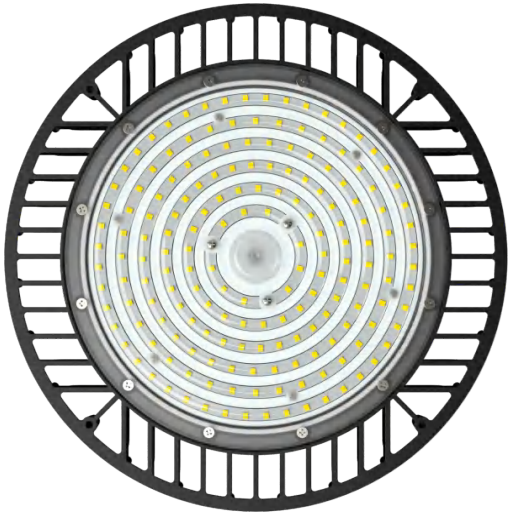

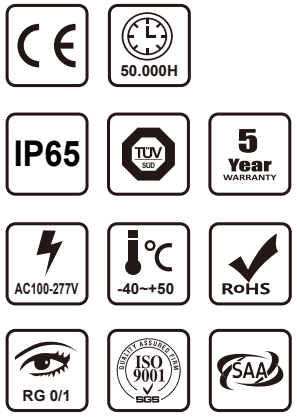

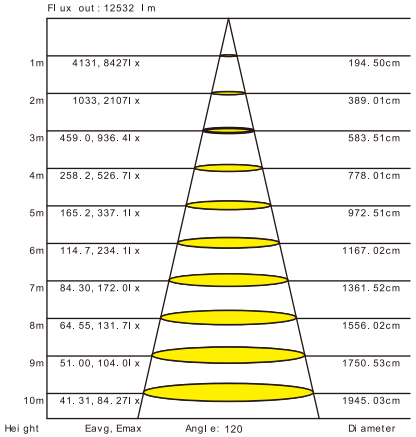

Note:The Curves indicate the illuminated area and the average illumination when the luminaire is at different distance.

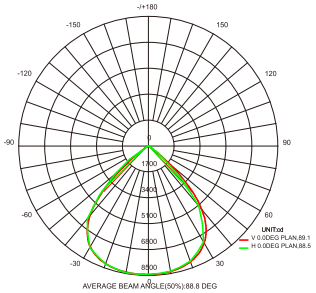

120°

Applications

- Sports lighting
- Storage
- Warehouse

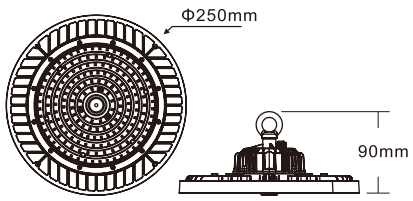

50/100W

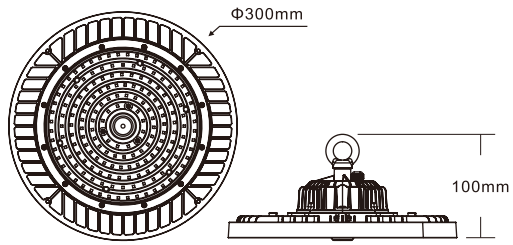

150W

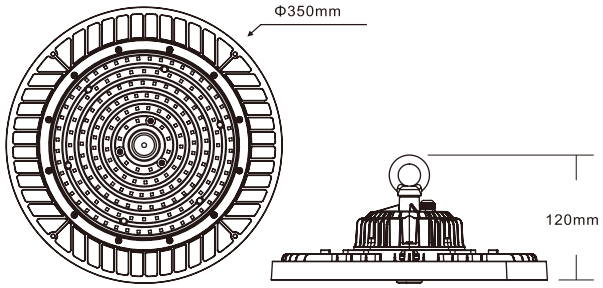

200/240W

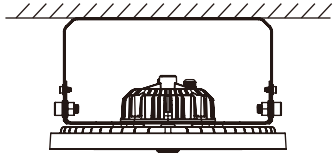

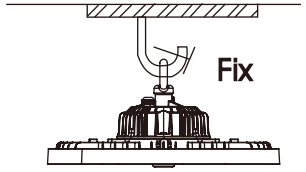

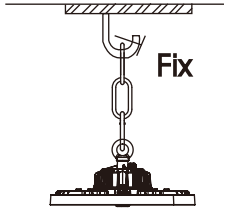

Specifications

Product Code	TBF14-50W	TBF14-100W	TBF14-150W	TBF14-200W	TBF14-240W
Lamp Power	50W	100W	150W	200W	240W
LED Qty	120pcs	120pcs	180pcs	240pcs	240pcs
Pole Diameter	∅250mm	∅250mm	∅300mm	∅350mm	∅350mm
Material	Die-cast Aluminium+PC Lens, Shine angle 90 or 120°				
Lamp Flux	150/170/190LMW				
LED Color	3000-3500K; 4000-4500K; 5000-5500K; 6000-6500K				
IP Grade	IP65				
CRI	Ra>70				
Life Time	50000H				
SPD	4KV-6KV				
Input Voltage	AC85-305V				
Body Color	Black or Grey				
Certificate	CB/CE/SAA/FCC/ROHS				

TUBU LED High Bay Light

Features

- Top and bottom vent convection, high-quality heat dissipation
- Wattage from 150W to 200W optional
- Power Selectable (Optional)
- High energy savings compared to systems with traditional discharge lamps
- High visual comfort
- No hazardous materials
- Fast ROI thanks to long life span and reduced maintenance
- The integrated casing has been optimized to dissipate heat and reduce dust accumulation
- Dedicated range of mounting accessories

CE | 50.000H | IP65 | 5 Year WARRANTY

AC100-277V | -30~+40 | IK09 | RG 0/1 | Emergency

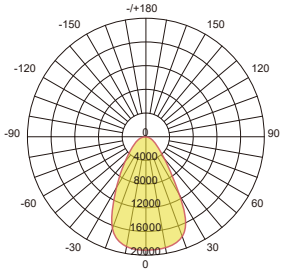

60°

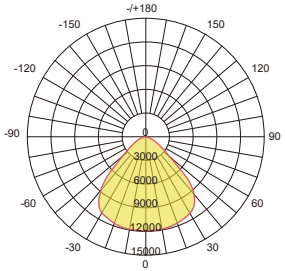

90°

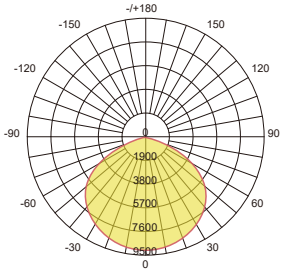

120°

Applications

- Car parks
- Large areas
- Industrial halls & warehouses
- Sport facilities

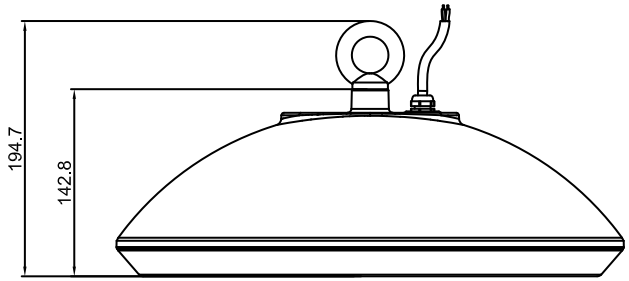

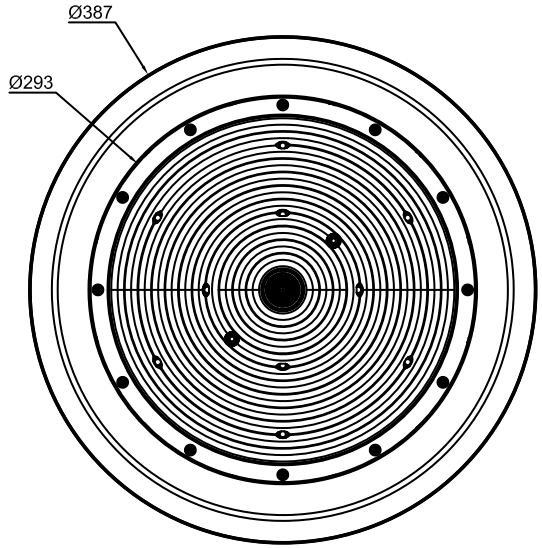

Specifications

Product Code	TBF16-150W	TBF16-200W
Power	150W	200W
Input Voltage	120-277VAC (50/60Hz)	
Input Current	0.9A / 220VAC	
PF	0.95@220VAC	
Dimming	3 in dimming (PWM, 0-10V, resistor), Power dial or internal microwave controller	
Dimming DC 12V Driver	12VDC±10%, Max current 200mA（Dimming：External control and built-in microwave control can only be used, only use in 12V）	
CCT	3000K / 4000K / 5000K / 5700K / 6500K	
Luminous Flux	22500Lm(Ra>70) 21000Lm(Ra>80)	30000Lm(Ra>70) 28000Lm(Ra>80)
Efficiency	150Lm/W±10% (Ra>70/80 SDCM≤5)	
Luminous Flux	25500Lm(Ra>70) 24000Lm(Ra>80)	34000Lm(Ra>70) 32000Lm(Ra>80)
Efficiency	170Lm/W±10% (Ra>70/80 SDCM≤5)	
Luminous Flux	28500Lm(Ra>70) 27000Lm(Ra>80)	38000Lm(Ra>70) 36000Lm(Ra>80)
Efficiency	190Lm/W±10% (Ra>70/80SDCM≤5)	
Luminous Flux	31500Lm(Ra>70) 30000Lm(Ra>80)	42000Lm(Ra>70) 40000Lm(Ra>80)
Efficiency	210Lm/W±10% (Ra>70/80SDCM≤5)	
Light Type	SMD 2835	
Working Temperature	-30~+40℃	
Storage Temperature and Humidity	-40～85℃，10～90% RH non-condensing	
Life Span	50000 hours	
Surge Lighting Stroke	6KV	
IP/IK Class	IP65 / IK09	
Certificate	CE, RoHS	
Materials Color	Housing: die-casting aluminium Housing color: Black (RAL9017) Optics lens: PC	
Product Size (mm)	∅387*142.8	∅387*142.8
Packing Size (mm)	430*430*180	430*430*180
Quantity / Carton	1PCS	1PCS
Gross Weight (kg) ±0.3	6kg	6kg
Installation Mode	Suspending / wall mounted (reference the instruction)	

TUBU

LED Linear High Bay Light G1

Features

- High output LED's, up to 140Lm/W ~ 160Lm/W
- High CRI>80
- Brand driver TUV UL CE certified PF >0.96, THD<12
- Flicker free
- Environmentally friendly, no mercury, no UV, no IR
- IP65, indoor use
- Quick start instant 100% luminous flux
- 5 years warranty
- Certificate: CE, RoHS, SAA
- Housing material: aluminium alloy
- Options: 1-10V, DALI dimming, microwave sensor
- Surface mount & suspension mount optional

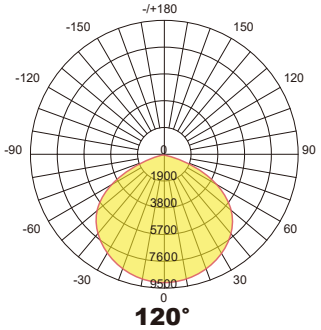

Applications

- Sports halls
- Warehouse
- Airport
- Bus station
- Supermarket
- Workshops
- Sports halls
- Exhibition halls
- Badminton court

CE | RoHS | Dimmable | 5 Year WARRANTY | IP65

AC200-240V | -20~+45 | IK10 | RG 0/1 | Emergency | 50.000H

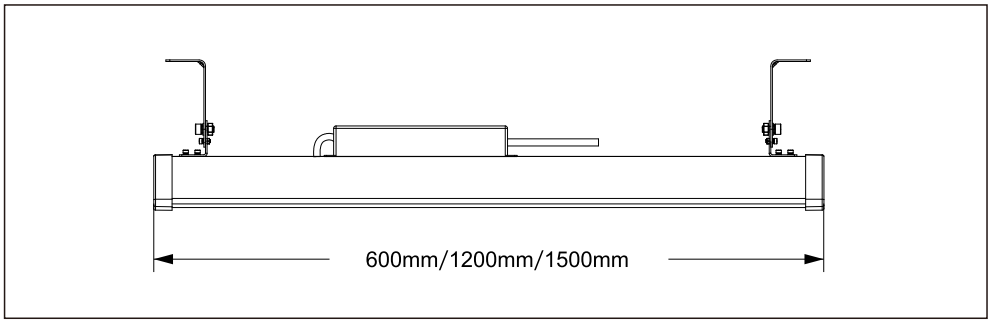

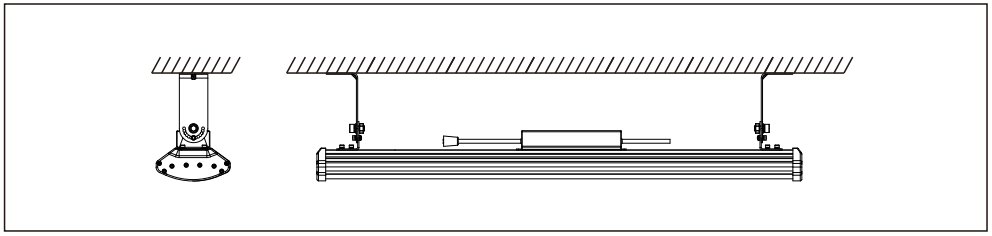

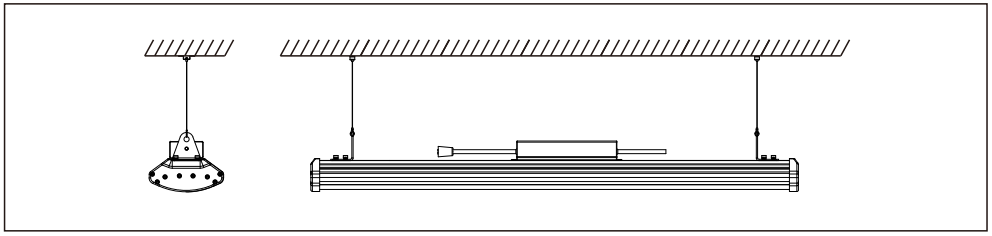

Specifications

Product Code	TB-HT080W-G1	TB-HT150W-G1	TB-HT200W-G1
Power	80W	150W	200W
Input Voltage	200-240VAC / 100-277VAC (50/60Hz)		
PF	>0.90@220VAC		
Dimming Optional	1-10V or DALI dimming		
CCT	2700K / 3000K / 4000K / 5000K / 5700K / 6000K /6500K		
Luminous Flux	11200Lm	21000Lm	28000Lm
Efficiency	140Lm/W±5% (Ra>80 5000K)		
Luminous Flux	12800Lm	24000Lm	32000Lm
Efficiency	160Lm/W±5% (Ra>80 5000K)		
Light Type	SMD 2835 / 3030		
Operation Temp	-20℃~+45℃		
Storage Temp	-20℃~+60℃		
Life Span	Ta 45℃ L70>54000 hours		
IP Class	IP65		
IK Class	IK10		
Certificate	CE, RoHS, SAA		
Lamp Body Color	Housing: aluminum Color: silver Lens: PC		
Product Size (mm)	600*175*75	1200*150*67	1500*150*67
Packing Size (mm)	650*250*220	1250*250*220	1550*250*220
Quantity / Carton	2PCS	2PCS	2PCS
Gross Weight (kg)	9kg	16kg	18kg
Installation Mode	Surface mount, Suspension mount		

TUBU

LED Linear High Bay Light G2

Features

- High output LED's, up to 140Lm/W ~ 160Lm/W
- High CRI>80
- Brand driver, TUV UL CE certified, PF>0.96, THD<12
- Flicker free
- Environmentally friendly, no mercury, no UV, no IR
- IP65, indoor use
- Quick start instant 100% luminous flux
- 5 years warranty
- Optional: 1-10V, DALI dimming, microwave
- Surface mount & suspension mount optional
- Certificate: CE, RoHS, SAA

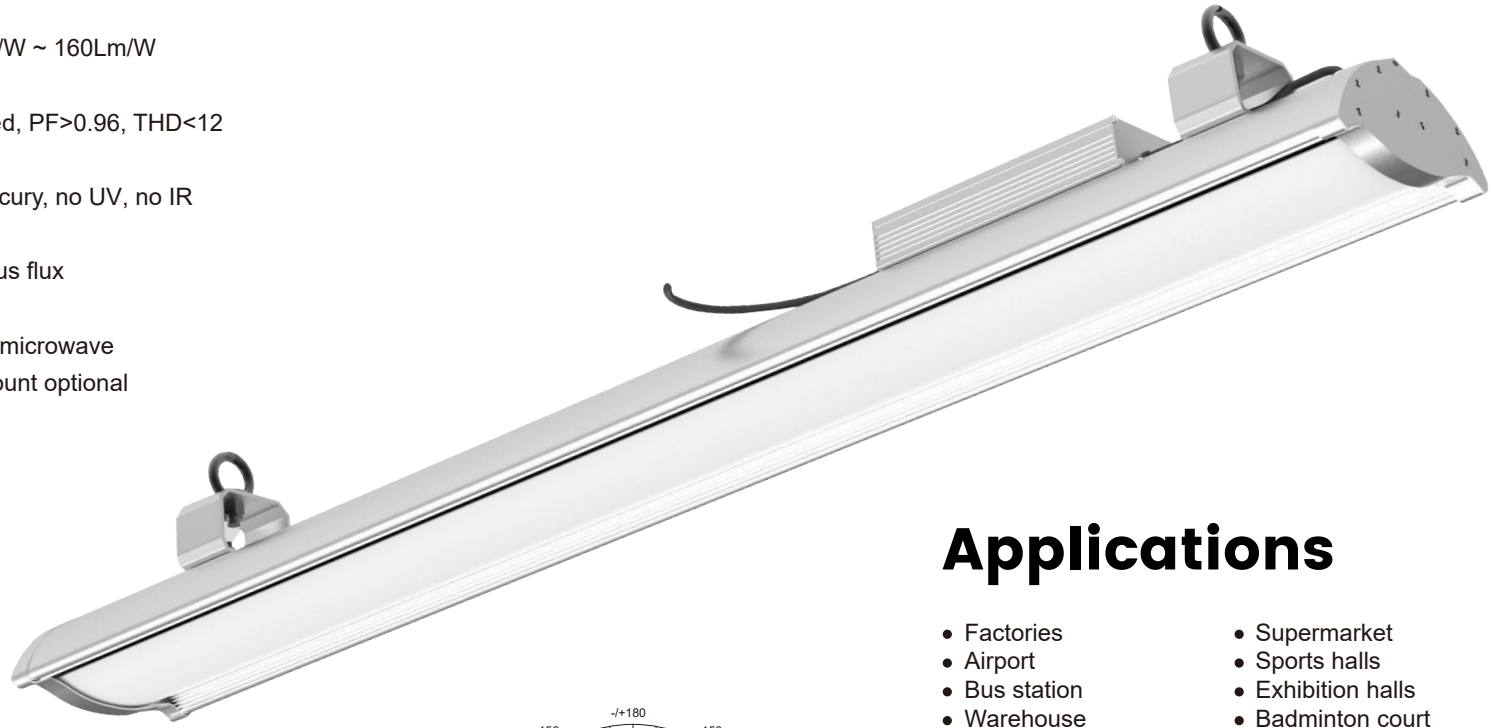

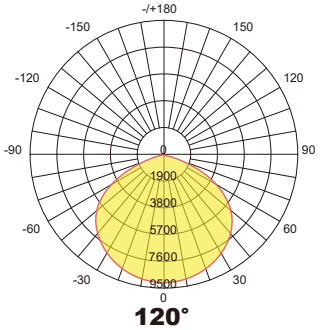

Applications

- Factories
- Airport
- Bus station
- Warehouse
- Workshops
- Supermarket
- Sports halls
- Exhibition halls
- Badminton court

CE | RoHS | Dimmable | 5 Year WARRANTY | IP65

AC200-240V | -20~+45 | IK10 | RG 0/1 | Emergency | 50.000H

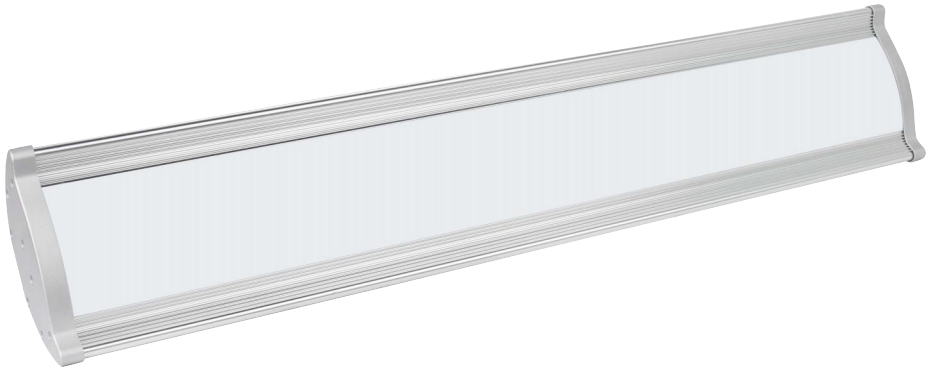

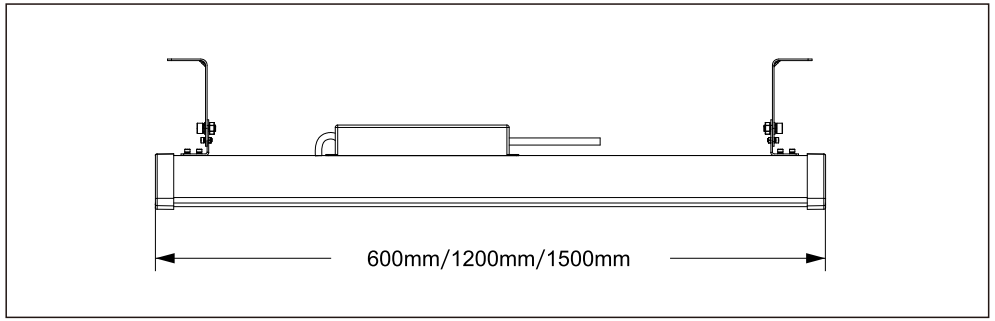

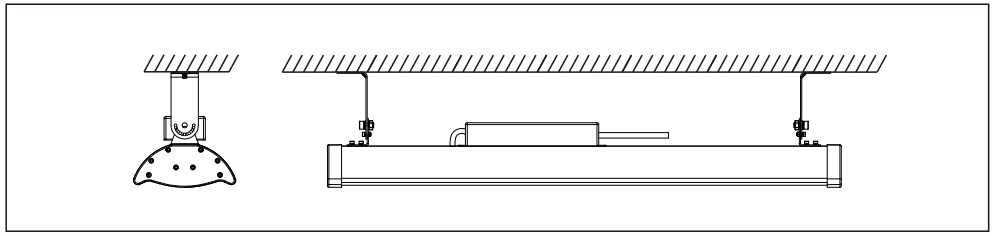

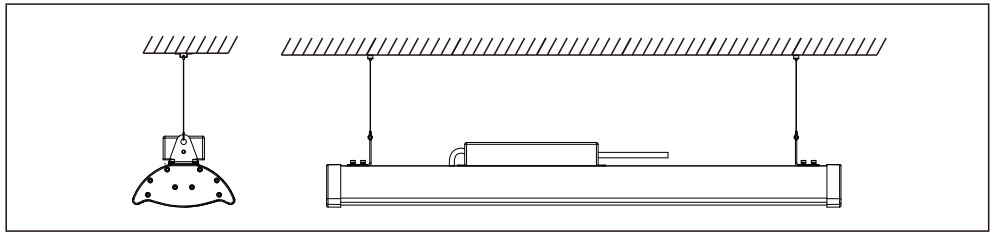

Specifications

Product Code	TB-HT080W-G2	TB-HT150W-G2	TB-HT200W-G2
Power	80W	150W	200W
Input Voltage	200-240VAC / 100-277VAC (50/60Hz)		
PF	>0.9@220VAC		
Dimming (Optional)	1-10V / DALI dimming		
CCT	2700K / 3000K / 4000K / 5000K / 5700K / 6000K /6500K		
Luminous Flux	11200Lm	21000Lm	28000Lm
Efficiency	140Lm/W±5% (Ra>80 5000K)		
Luminous Flux	12800Lm	24000Lm	32000Lm
Efficiency	160Lm/W±5% (Ra>80 5000K)		
Light Type	SMD 2835 / 3030		
Operation Temp	-20℃~+45℃		
Storage Temp	-20℃~+60℃		
Life Span	Ta 45℃ L70>54000 hours		
IP Class	IP65		
IK Class	IK10		
Certificate	CE, RoHS, SAA		
Lamp Body Color	Housing: aluminum Color: silver Lens: PC		
Product Size (mm)	600*175*75	1200*175*75	1500*175*75
Packing Size (mm)	650*250*220	1250*250*220	1550*250*220
Quantity / Carton	2pcs	2pcs	2pcs
Gross Weight (kg)	9kg	16kg	18kg
Installation Mode	Surface mount / Suspension mount		

TUBU

UGR<19 LED Linear High Bay Light G2 DXG

Features

- High output LED's, up to 130Lm/W, LM80 certified light source
- High CRI>80
- Brand driver, TUV UL CE certified, PF>0.96, THD<12
- Flicker free
- Environmentally friendly, no mercury, no UV, no IR
- IP65, indoor & outdoor using
- Quick start instant 100% luminous flux
- 5 years warranty
- Certificate: CE, RoHS, SAA, IP65 report
- Options: 1-10V dimming, microwave
- Hanging mount accessories included

Applications

- Factories
- Airport
- Bus station
- Warehouse
- Workshops
- Supermark
- Sports halls
- Exhibition halls
- Badminton court

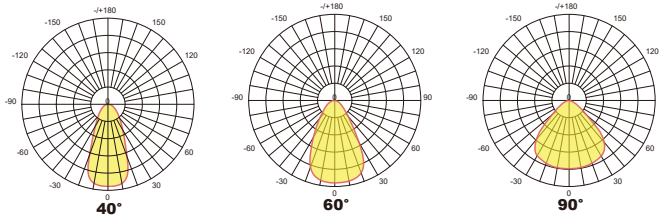

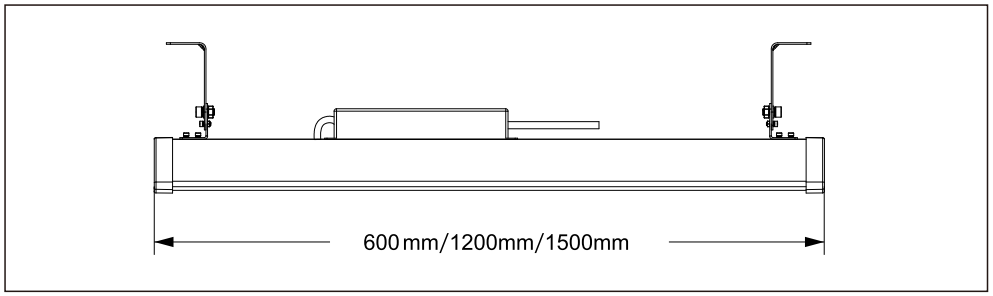

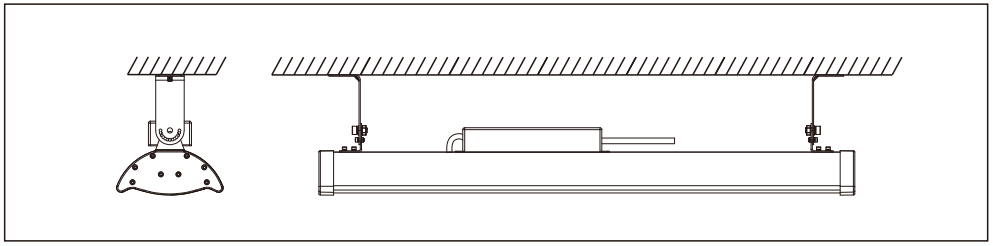

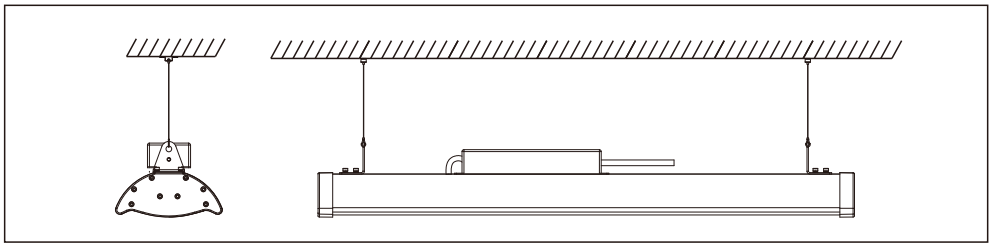

Specifications

Product Code	MG-HT150WF-DXG	MG-HT200WF-DXG
Power	150W	200W
Input Voltage	2200-240VAC	
PF	>0.9@220VAC	
Dimming (Optional)	1-10V / DALI dimming	
CCT	2700K / 3000K / 4000K / 5000K / 5700K / 6000K /6500K	
Luminous Flux	195000Lm	26000Lm
Efficiency	130lm/W±5% (Ra>80 5000K)	
Luminous Flux	22500Lm	30000Lm
Efficiency	150Lm/W±5% (Ra>80 5000K)	
Light Type	SMD 3030 / 5050	
Operation Temp	-40°C ~ 45°C	
Storage Temp	-40°C ~ 80°C	
Life Span	Ta 45°C L70>54000 hours	
IP Class	IP65	
IK Class	IK10	
Certificate	CE, RoHS, SAA	
Lamp Body Color	Housing: aluminum Color: silver Lens: PC	
Product Size (mm)	1200*175*75	1500*175*75
Packing Size (mm)	1250*230*235	1550*230*235
Quantity / Carton	2pcs	2pcs
Gross Weight (kg)	7.8kg	8.7kg
Installation Mode	Surface mount / Suspension mount	

TUBU

LED Linear Industrial Light L16

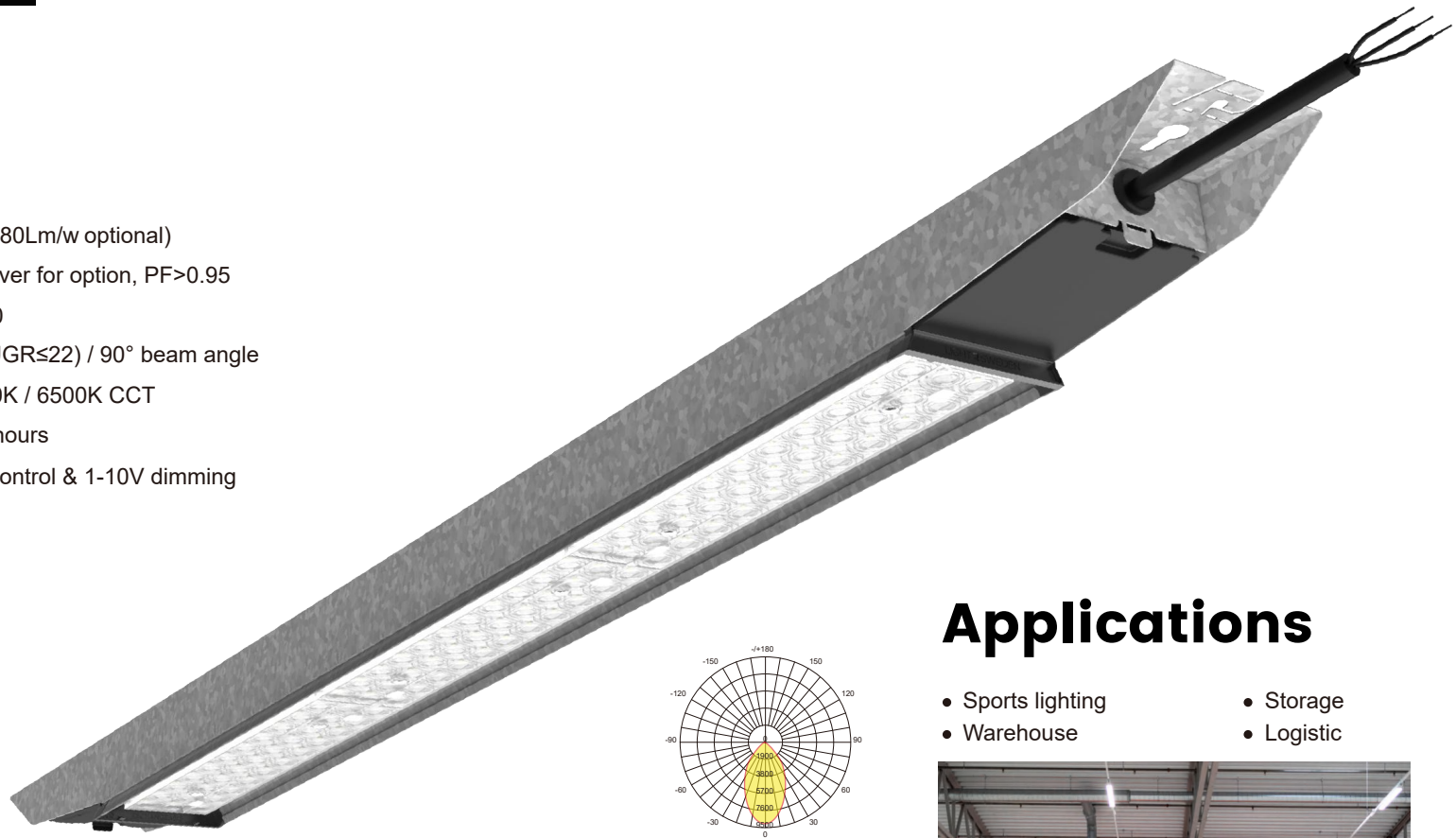

Features

- Patented design
- System efficiency 150Lm/w (180Lm/w optional)
- Meanwell / Philips / Sosen Driver for option, PF>0.95
- 3030/5050 SMD LED, CRI>80
- Available with 30° / 60°/ 70°(UGR≤22) / 90° beam angle
- 3000K / 4000K / 5000K / 5700K / 6500K CCT
- Long life span, L70>100,000 hours
- Controls and dimming: DALI control & 1-10V dimming

30°

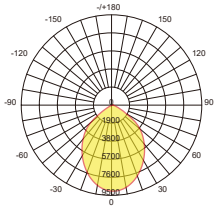

60°

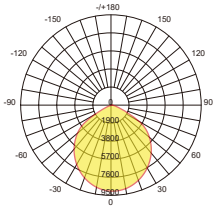

70°

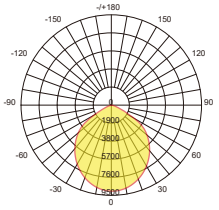

90°

CE RoHS

100.000H | Dimmable | 5 Year WARRANTY | Emergency

AC200-240V | -20~+40 | IK08 | RG 0/1

Applications

- Sports lighting
- Warehouse
- Storage
- Logistic

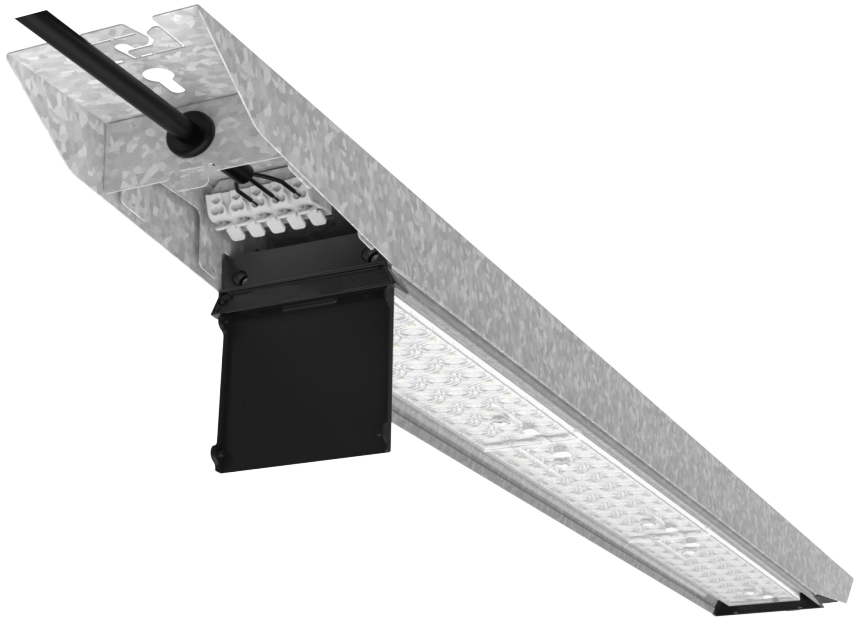

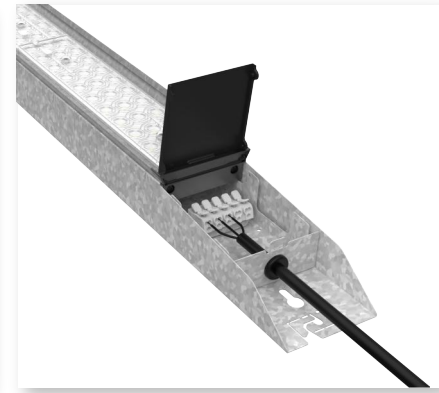

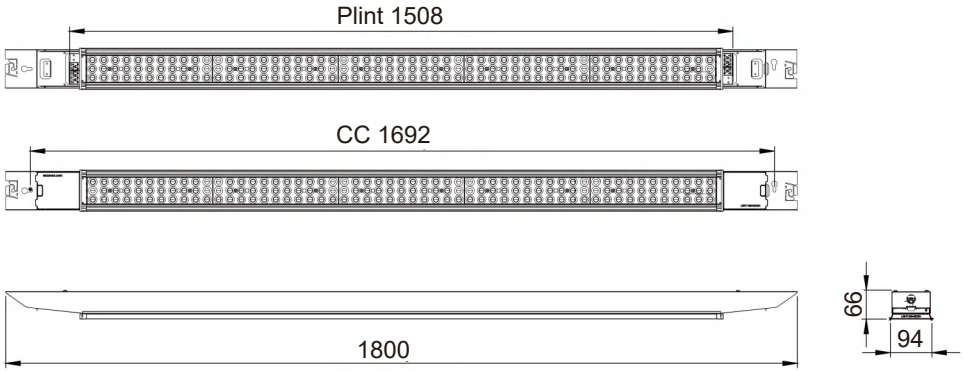

Specifications

Product Code	TBL16-75W	TBL16-90W	TBL16-120W
Power	75W	90W	120W
Input Voltage	200-240VAC (50/60Hz)		
Input Current	0.35A@220VAC	0.45A@220VAC	0.6A@220VAC
PF	0.90@220VAC		
Dimming Option	DALI / 1-10V		
CCT	2700K / 3000K / 4000K / 5000K / 5700K / 6000K /6500K		
Luminous Flux	11250Lm / 13500Lm	13500Lm / 16200Lm	18000Lm / 21600Lm
Efficiency	150Lm/w±5% / 180Lm/w±5% (Ra>80)		
LED Brand	SMD 3030 / 5050		
Beam Angle	30° / 60°/ 70°(UGR≤22) / 90°		
Operation Temp	-20℃~+40℃		
Storage Temp	-20℃~+60℃		
Life Span	Ta 40℃ L70>100,000 hours		
IP Class	IP23		
IK Class	IK08		
Certificate	CE, RoHS		
Lamp Body Color	Painted (Ral 9006) galvanised steel		
Product Size (mm)	1230*94*66	1530*94*66	1830*94*66
Packing Size (mm)	1270*241*260	1840*241*185	1840*241*185
Quantity / Carton	6PCS	4PCS	4PCS
Gross Weight (kg) ±0.3	19.88	19.84	19.84
Installation Mode	Surface mount / Suspension mount		

LED Grow Light

Quantum Board LED Grow Light
PAGE 77-78

LED Grow Light Bar
PAGE 79-80

LED Square Grow Lights
PAGE 81-82

TUBU

Quantum Board LED Grow Light

Features

- High-efficiency full spectrum LED grow light
- Added deep red, and IR
- Save 50% on electricity costs when compared to HPS
- Waterproof IP65, for indoor growing
- Dimmable driver, with 20% ～100% easy dimming knob to turn on/off the lights
- Long lifespan up to L70>54,000 hours according to the calculation of the LEDs LM80 testing report
- Two adjustable hanging kits are included

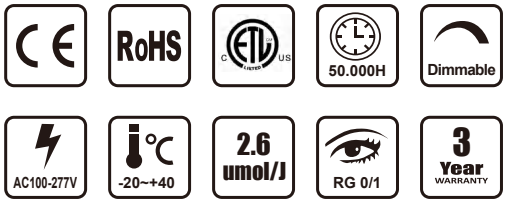

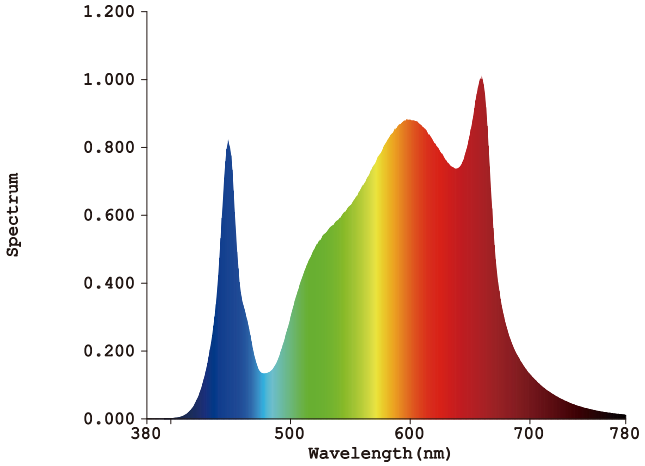

Applications

- Indoor growing house

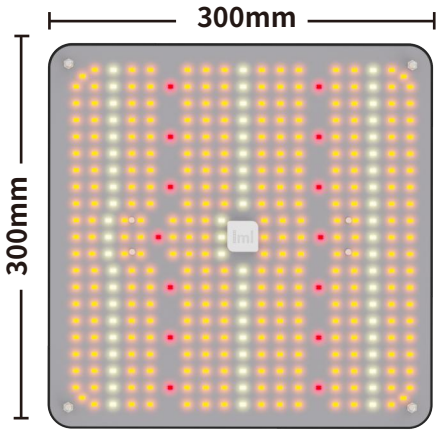

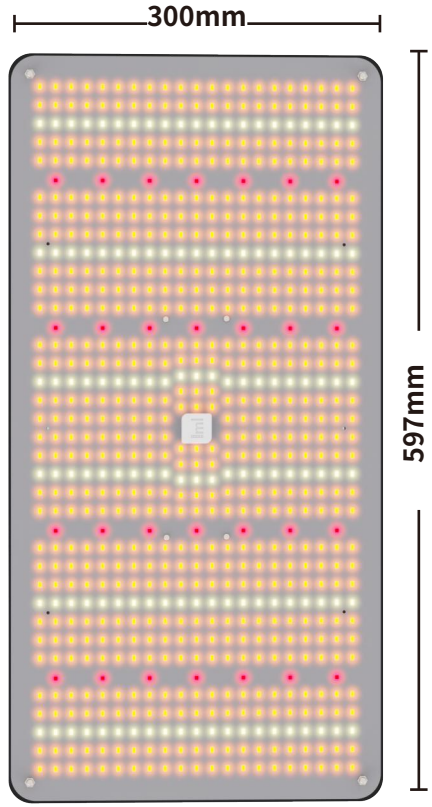

Specifications

Product Code	TBGL-120W	TBGL-240W
Power	120W	240W
Efficiency PPE	2.6umol/J	2.6umol/J
PPF Output	312umol/s	624umol/s
Power Input	100-240 VAC, 277VAC, 50-60Hz	100-240 VAC, 277VAC, 50-60Hz
Driver	Lightmyleaf	Lightmyleaf
Color	White + Red	White + Red
Dimming	0% 20% 40% 60% 80% 100%	
LED Brand	2835 / 3030 / 3535	
Beam Angle	120°	
Operation Temp	-20°C~+40°C	
Storage Temp	-20°C~+60°C	
Life Span	Ta 40°C L70>54000 hours	
IP Class	IP65	
Certificate	CE, RoHS, ETL	
Lamp Body Color	Black aluminium	
Product Size (mm)	300*300	300*597
Packing Size (mm)	320*310*80	630*310*80
Quantity / Carton	1PCS	1PCS
Gross Weight (kg) ±0.3	3.0	3.8
Installation Mode	Suspension mount	

TUBU LED Grow Light Bar

Features

- foldable PPE 2.7umol/J 8 bar vertical farming LED grow light
- Super compact design, save 50% shipping cost
- Driver & dimmer integrated design, plug & play, easy to use
- Wide range watts, 600W,800W, 1000W ,1200Wavailable
- IP54 Waterproof rated, suitable for damp location, no irrigating concerns
- Group control, Knob dimmer and RJ12 port available
- 3 Years Warranty
- Customization available

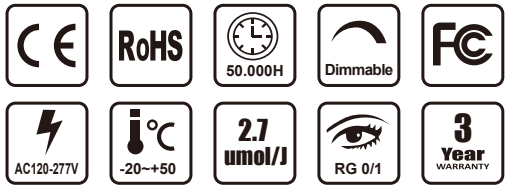

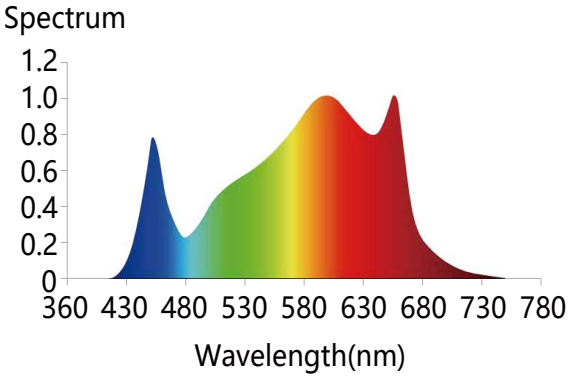

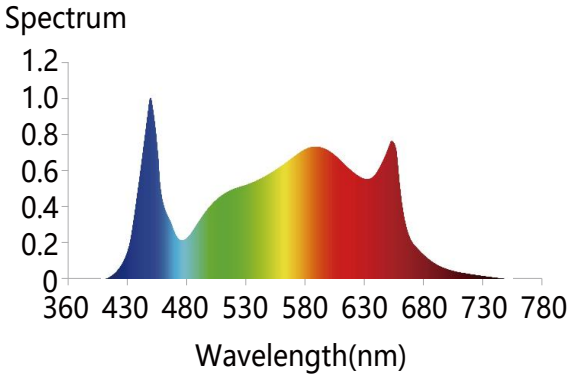

Applications

- Commercial
- Grow room
- Vertical racks

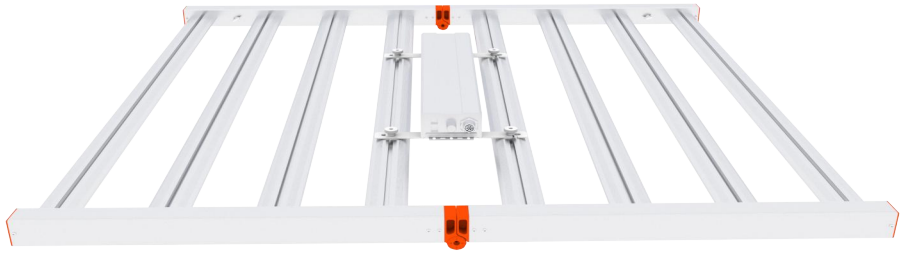

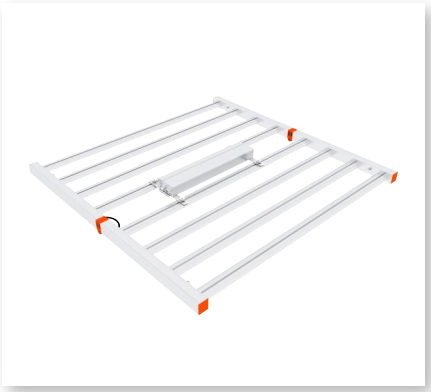

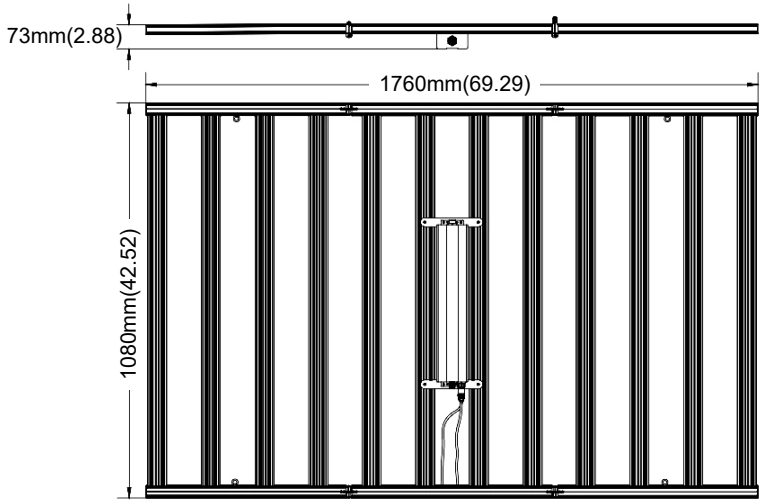

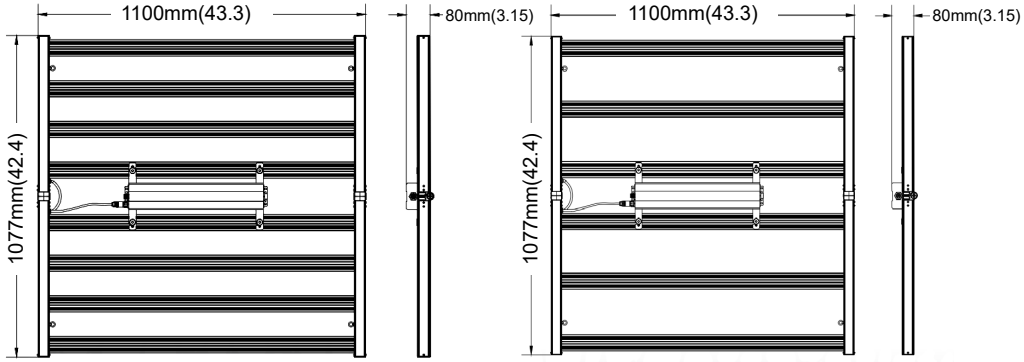

Specifications

Product Code	TBGL-V-600W-6	TBGL-V-800W-8	TBGL-V-1000W-8	TBGL-V-1200W-12
Wattage	600W	800W	1000W	1200W
PPF	1560μmol/s	2080μmol/s	2600μmol/s	3240μmol/s
PPE	2.6μmol/s/W (μmol/J)			2.7μmol/s/W (μmol/J)
Input Voltage\frequency	AC120-277V/AC249-528V			
Dimming (Optional)	0% 20% 40% 60% 80% 100%			
PF	＞0.95			
CCT	4000K+660nm			
Light angle	120°			
LED Brand	LEDESTA 2835/3535			
Operation Temp	-20℃~+50℃， 20~95%RH No condensation			
Storage Temp	-20~85℃,10~95%RHNo condensation			
IP Grade	IP54			
Certificate	CE, RoHs			
Product Size (mm)	1100*1077*80	1100*1077*80	1100*1077*80	1760*1080*73
Packing Size (mm)	1125*590*115	1125*590*115	1125*590*115	1120*655*190
Quantity/carton	1PCS			
Installation mode	Surface Mount/Suspension Mount			

TUBU LED Square Grow Lights

Features

- PPE 2.6umol/J
- Power: 760W, 1200W
- Has a full spectrum of plant growth
- Fits seamlessly into existing HPS layouts
- 20% energy saving compared to 1000W DE HPS
- Compatible with TUBU controllers
- Equipped with external RJ14 cable for daisy-chaining for series control (up to 80 lamps in series)

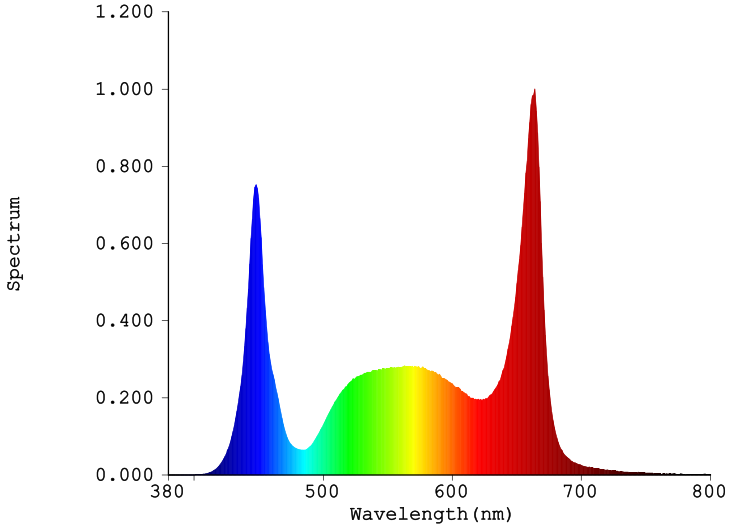

Applications

- Indoor growing house

CE | RoHS | 50.000H | Dimmable

AC100-277V | -20~+40 | 2.6 umol/J | RG 0/1 | 5 Year WARRANTY

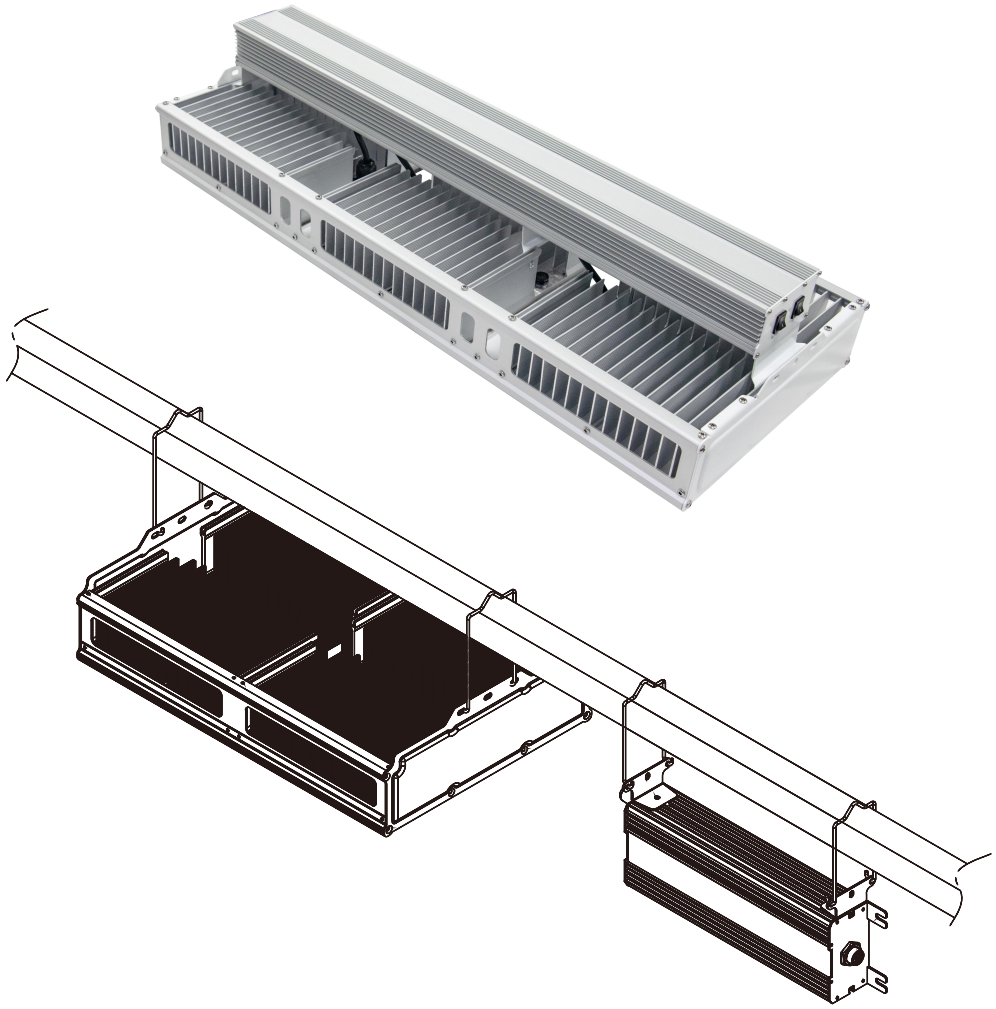

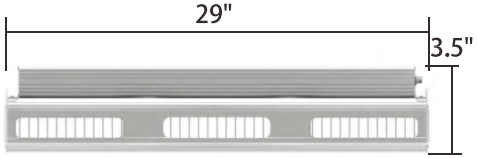

Specifications

Product Code	TB-PLD-760	TB-PLD-1200
Power	760W	1200W
Input Voltage	120-277VAC (50/60HZ)/277-480VAC (50/60HZ)	
Dimming Option	0-10V	
CCT	6500K+450nm+660nm	
PPFD	1976μmol/s	3120μmol/s
PPE	2.6 (μmol/J)	2.6（μmol/J）
LED Brand	LED China/Seoul/Osram 3030/5050	
Beam Angle	100°	
Operation Temp	113° F/40°C	
Storage Temp	-40°C~+80°C	
Life Span	50000hrs	
IP Class	IP65	
Color rendering index	Ra85	
Total Harmonic Distortion(THD)	<15%	
Certificate	CETL,CE, RoHs	
Product Size (mm)	520*315*100	770*375*170
Packing Size (mm)	530*325*110	780*385*180
Quantity / Carton	1PCS	1PCS
Gross Weight (kg) ±0.3	16kg	19kg
Installation Mode	Surface Mount/Suspension Mount	

LED Flood Light

Slimline LED Flood Light TG1
PAGE 85-86

High Mast LED Flood Light HMG4
PAGE 87-88

TUBU

Slimline LED Flood Light TG1

Features

- High output LED's, up to 130Lm/W ~ 150Lm/W
- High CRI>70
- Lumileds LEDs
- Brand driver, TUV UL CE certificates, PF>0.96 THD<12
- 30° / 60° / 90° / 120° / 30*90° / TYPE III multi beam angles for option
- Durable tempered glass front
- Environmentally friendly, no mercury, no UV no IR
- IP66, indoor & outdoor use
- Quick to install and easy to use, secure and reliable
- 5 years warranty
- Certificate: CE, RoHS

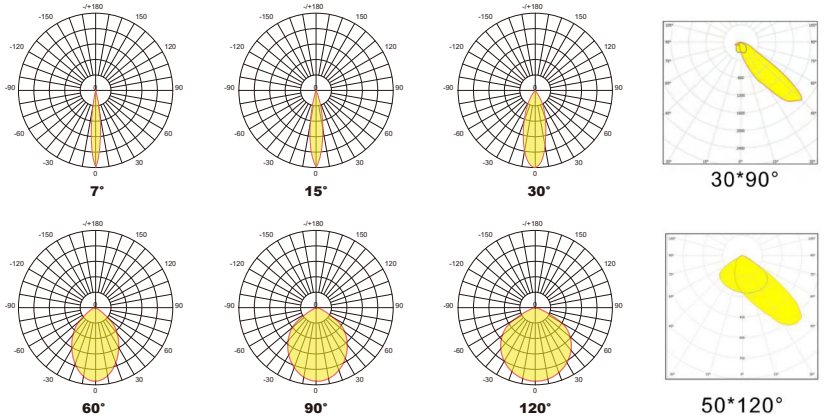

Applications

- Parking lot lighting
- Car lot lighting
- Street lighting
- Walkway lighting
- Building accent lighting
- Area & storage lighting

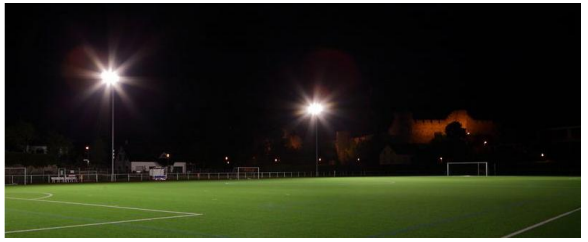

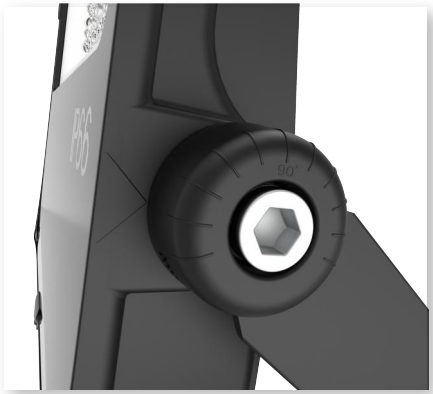

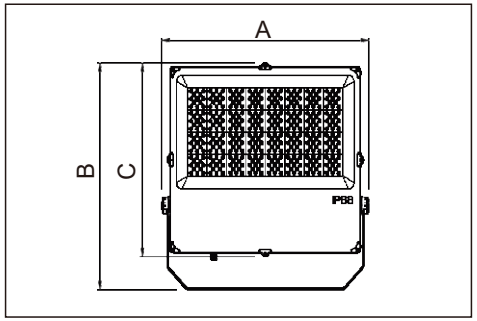

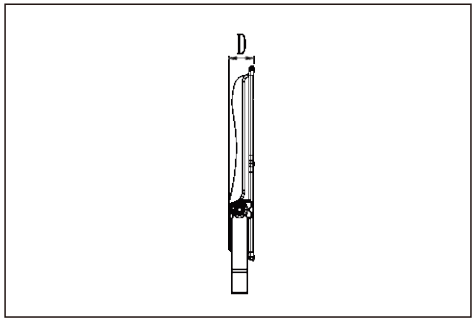

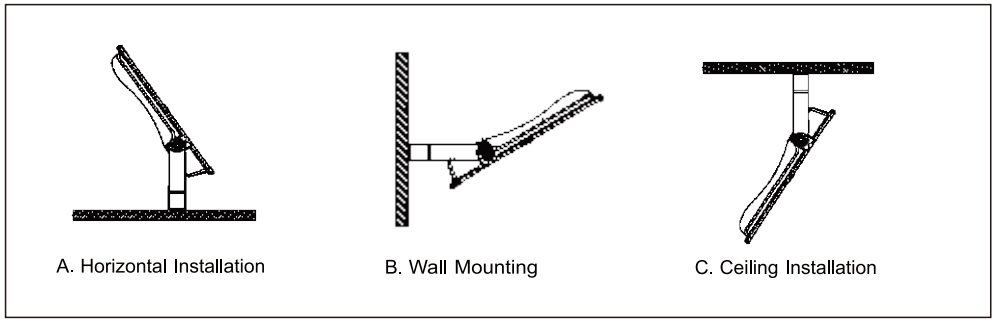

Specifications

Product Code	TBTG1-20W	TBTG1-30W	TBTG1-50W	TBTG1-100W	TBTG1-150W	TBTG1-200W	TBTG1-250W	TBTG1-300W	TBTG1-400W
Power	20W	30W	50W	100W	150W	200W	250W	300W	400W
Input Voltage	200-240VAC (50/60Hz)								
PF	>0.9@220VAC								
Dimming (Optional)	0-10V / DALI dimming								
CCT	3000K / 4000K / 5000K / 6000K								
Luminous Flux	2400lm	3600lm	6000lm	12000lm	18000lm	24000lm	30000lm	36000lm	48000lm
Efficiency	130Lm/W±5% (Ra>70 5000K)								
Luminous Flux	2600lm	3900lm	6500lm	13000lm	19500lm	26000lm	32500lm	39000lm	52000lm
Efficiency	150Lm/W±5% (Ra>70 5000K)								
LED Brand	Lumileds / Hongli								
Light Type	SMD 3030 or SMD 2835								
Operation Temp	-40℃~+45℃								
Storage Temp	-40℃~+60℃								
Life Span	Ta 45℃ L70>54000 hours								
IP Class	IP66								
IK Class	IK08								
Certificate	CE, RoHS								
Lamp Body Color	Black (RAL9005)								
Product Size (mm)	122*182*47	169*248*51	228*288*52	278*364*53	394*394*56	394*445*56	394*497*58	394*497*58	545*523*65
Packing Size (mm)	405*275*220	365*270*315	475*310*315	390*305*315	440*320*115	490*420*115	540*420*115	540*420*115	580*550*115
Quantity / Carton	20pcs	10pcs	10pcs	5pcs	1pcs	1pcs	1pcs	1pcs	1pcs
Gross Weight (kg)	16kg	12kg	18kg	13kg	5.6kg	6.6kg	8.1kg	8.6kg	12.3kg
Installation Mode	Horizontal installation / Wall mounting / Ceiling installation								

TUBU

High Mast LED Flood Light HMG4

Features

- Efficiency: up to 160Lm/W, 140Lm/W ~ 190Lm/W available
- LED Chip: lumileds 3030 / 5050 or Bridgelux 3030
- SDCM: <5
- Beam angle: 7° / 15° / 30° / 60° / 90° / 120° / TypeⅡ / TypeⅢ PC lens
- IP Rating: IP66
- Installation: bracket
- Certifications: CE, RoHS
- Warranty: 5 years

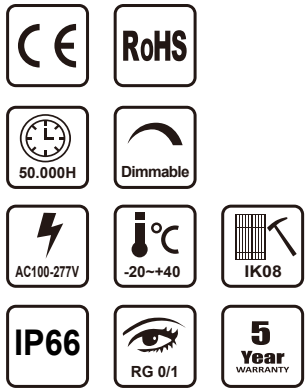

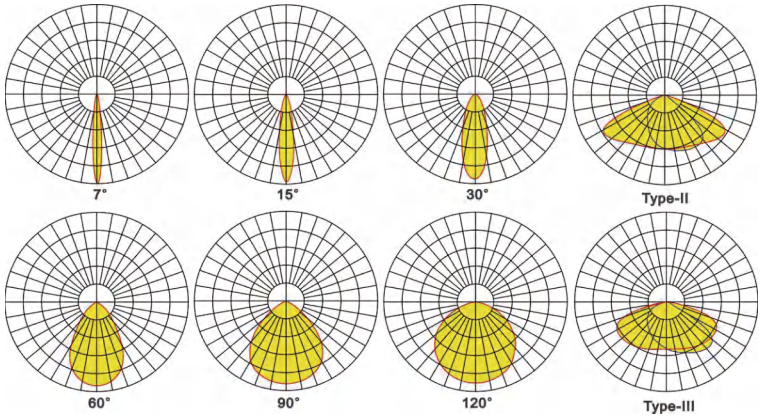

Applications

- Stadium
- Wharf
- Airport
- Dock
- Tower crane
- Football field
- Basketball court
- Tennis court
- Golf course
- Large outdoor parking lot

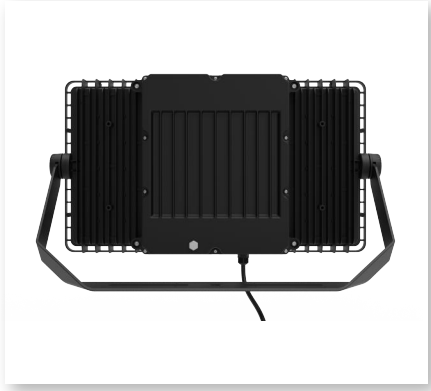

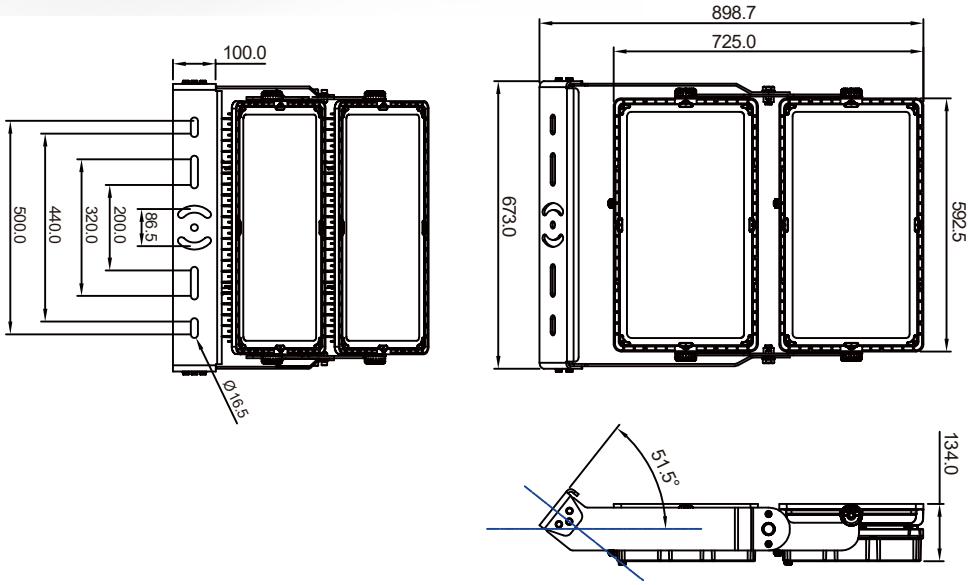

Specifications

Product Code	HMG4-500W HMG4-600W	HMG4-1000W HMG4-1200W	HMG4-1500W HMG4-1800W
Power	500W 600W	1000W 1200W	1500W 1800W
Input Voltage	100-277VAC		
PF	0.90@220VAC		
Dimming (Optional)	0-10V / DALI		
CCT	2700K / 3000K / 4000K / 5000K / 5700K / 6500K		
Luminous Flux	500W-80000Lm 600W-96000Lm	1000W-160000Lm 1200W-192000Lm	1500W-240000Lm 1800W-280000Lm
Efficiency	160Lm/W±10% (Ra>70 5000K)		
Luminous Flux	500W-95000Lm 600W-114000Lm	1000W-190000Lm 1200W-228000Lm	1500W-285000Lm 1800W-342000Lm
Efficiency	190Lm/W±10% (Ra>70 5000K)		
Beam Angle	7° / 15° / 30° / 60° / 90° / 120° Type2 / Type3 PC lens		
Operation Temp	-40°C~+50°C , 20~95% RH No condensation		
Storage Temp	-20°C~+85°C , 10~95% RH No condensation		
Life Span	Ta 50°C L70>54000 hours		
IP / IK Class	IP66 / IK08		
Certificate	CE, RoHS		
Lamp Body Color	Housing: die-casting aluminum Color: black (RAL9005) Lens: PC		
Product Warranty	5 years		
Installation Mode	Surface mount / Bracket mount		
Product Size (mm)	637*483*134	897*673*134	1286*673*134
Packing Size (mm)	672*534*188	990*763*220	1378*763*220
Gross Weight (kg)	16.5	40	56

LED Marine Searchlight

High-Intensity LED Marine Searchlight
PAGE 93-94

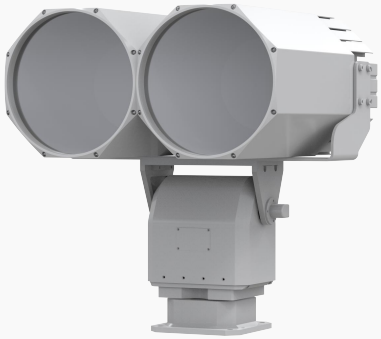

High Power LED Search Light
PAGE 95-96

IP66 Marine LED Searchlight
PAGE 97-98

TUBU

High-Intensity LED Marine Searchlight H3/Q3

Features

- Protection class: IP66
- Power: 240W / 300W available
- Luminous flux: ≥1000Lm
- Irradiation distance: ≥2000M (1LUX)
- Beam angle: 3.5° / 2.5°
- Slip-rings provide continuous 360° horizontal rotation with no stop points
- Auto-return to home position
- Auto-scan with user programmability
- Advanced proportional-speed control
- Approved for temperatures down to -35°C and up to +55°C
- Materials: marine grade aluminum and stainless steel with salt-resistant powder coat finish
- Lower power consumption: LED's consume 75% or more less power than Halogen lamps
- Longer life: LED's last tens-of-thousands of hours compared to approximately 250 to 750 hours depending upon the Halogen lamp. This reduces lamp replacement costs, increases reliability

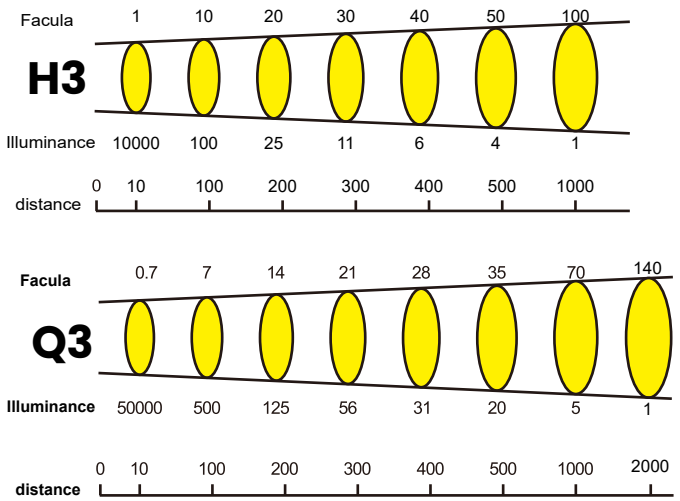

CE

IP66

RoHS

-35~+55

AC220V

3 Year WARRANTY

30.000H

Applications

- National defense
- Marine
- Military
- Water conservation
- Expedition and oil field
- Wharf
- Large surface warship
- Maritime search and rescue

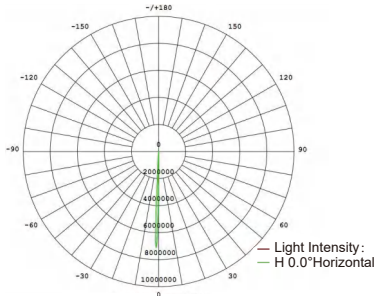

Average beam angle (50%): 2.1°

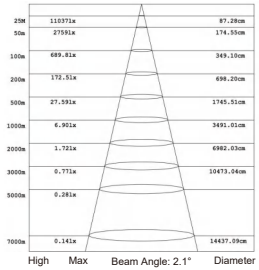

Note: The curve is the illumination area and the average illuminance in the area of the lamp under different projection distances

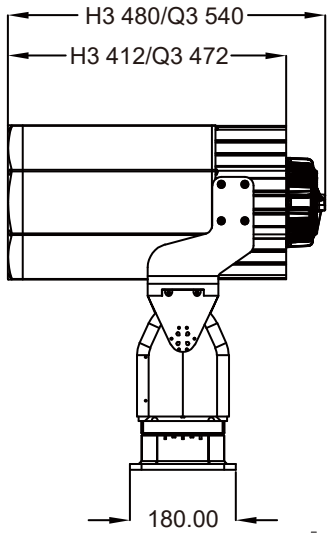

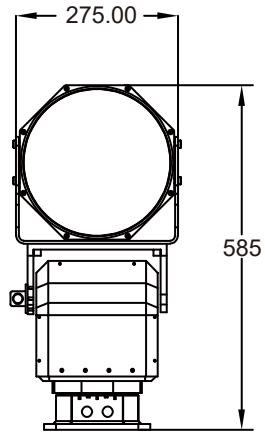

Specifications

Model		TB-SL240WCH3	TB-SL300WCH3	TB-SL240WAQ3	TB-SL300WAQ3
Light Information	Light Source	LED	LED	LED	LED
	Power Consumption	240W	300W	240W	300W
	Color Temperature	6500K			
	Input Voltage	AC100 ~ 277V (50/60Hz)			
	Working Temperature	-35℃～+55℃			
	IP Rating	IP66			
	Lifespan	>30,000 hours			
	Beam Angle	3.5°	3.5°	2.5°	2.5°
	Beam Distance	≥1000m (1LUX)	≥1000m (1LUX)	≥2000m (1LUX)	≥2000m (1LUX)
	Housing Material	1070 Pure aluminum cold forging, with salt-resistant, scratch-resistant white powder coat finish			
	Weight	25Kg	40Kg	25Kg	40Kg
Cloud Platform (Optional)	Adjustable Speed	Horizontal: 0.1°～25°/S, vertical 0.1°～15°/S			
	Adjustable Angle	Horizontal: 0～180°or 0～360°, vertical +30°～-30°, or customizable			
	Preset Position	200pcs			
	Repeated Positioning Accuracy	±0.2°			
	Communication Protocol	Pelco-D, Pelco-P for option			
	Communication Baud Bate	2400 / 4800 / 9600 / 9200 bps for option			
	Communication Interface	RS485 / RS422			
	Power	/	60W	/	60W

TUBU

IP65 Marine LED Searchlight H1/H2

Features

- Protection class: IP65
- Irradiation distance: ≥500M (1LUX) ≥1000m(0.25LUX)
- Beam angle: 6°
- Slip-rings provide continuous 360° horizontal rotation with no stop points
- Auto-return to home position
- Auto-scan with user programmability
- Advanced proportional-speed control
- Approved for temperatures down to -35°C and up to +55°C
- Materials: marine grade aluminum and stainless steel with salt-resistant powder coat finish
- Lower power consumption: LED's consume 75% or more less power than Halogen lamps
- Longer life: LED's last tens-of-thousands of hours compared to approximately 250 to 750 hours depending upon the Halogen lamp. This reduces lamp replacement costs, increases reliability

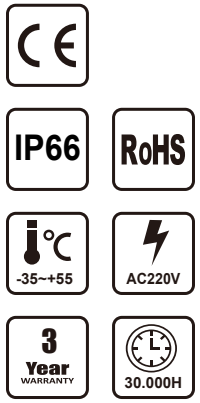

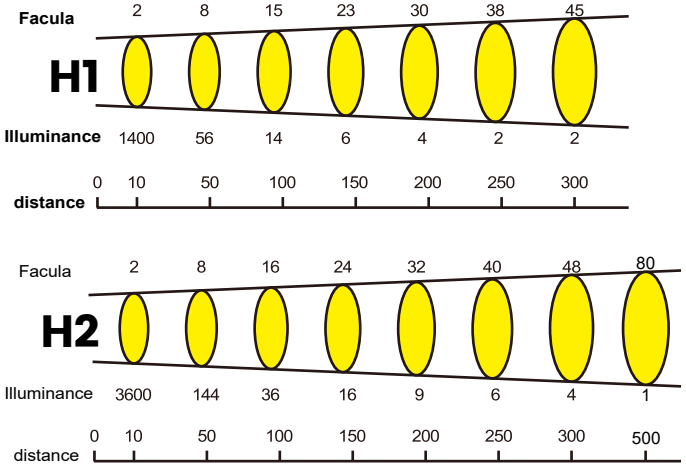

Applications

- National defense
- Marine
- Military
- Water conservation
- Expedition and oil field
- Wharf
- Large surface warship
- Maritime search and rescue

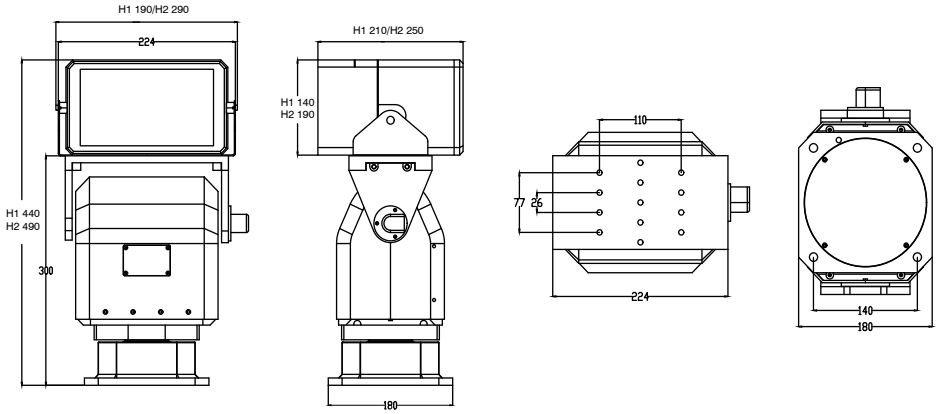

Cloud Platform

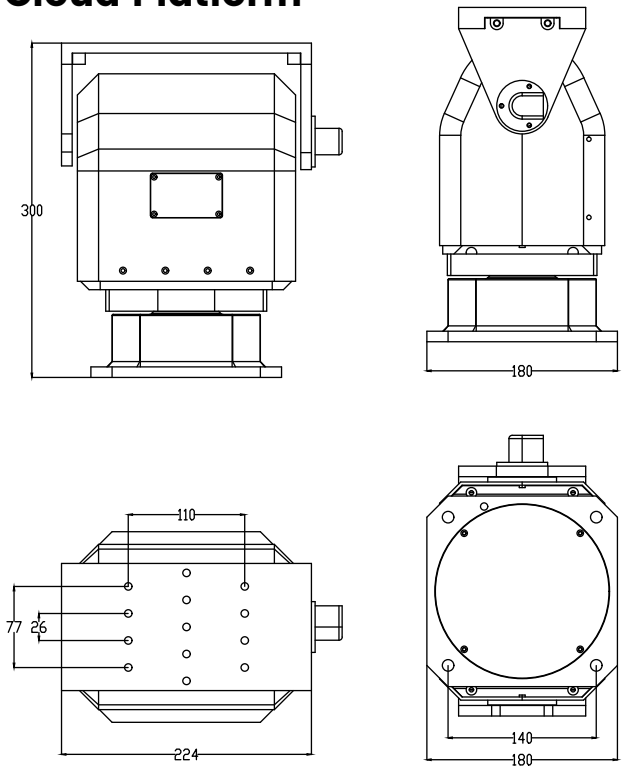

Specifications

Model		TB-SL80WBH1	TB-SL120WBH1	TB-SL160WAH2	TB-SL200WAH2
Light Information	Light Source	LED	LED	LED	LED
	Power Consumption	80W	120W	160W	200W
	Color Temperature	6500K			
	Input Voltage	AC 220V 50/60HZ/DC12V			
	Working Temperature	-35℃～+55℃			
	IP Rating	IP65			
	Lifespan	>30,000 hours			
	Beam Angle	6°			
	Beam Distance	≥300m (1LUX)	≥300m (1LUX)	≥500m(1LUX)	≥500m(1LUX)
	Weight	5Kg	10Kg	15Kg	20Kg
Cloud Platform (Optional)	Adjustable Speed	Horizontal: 1°～9°/S, vertical: 1°～6°/S			
	Adjustable Angle	Horizontal: 0～180°or 0～360°, vertical: +15°～-30°	Horizontal: 0～180°or 0～360°, vertical: +15°～-30°	Horizontal: 0~350°, vertical: +15°～-30°	Horizontal: 0~350°, vertical: +15°～-30°
	Preset Position	80pcs			
	Repeated Positioning Accuracy	±1°			
	Communication Protocol	Pelco-D, Pelcl-P for option			
	Communication Baud Bate	2400 / 4800 / 9600 / 19200 bps for option			
	Communication Interface	RS 485			
	Power	/	40W	/	40W

TUBU High Power LED Search Light

Features

- Protection class: IP66
- Power: 600W
- Irradiation distance: ≥400M (1LUX)
- Beam angle: 15°
- Slip-rings provide continuous 360° horizontal rotation with no stop points
- Auto-return to home position
- Auto-scan with user programmability
- Advanced proportional-speed control
- Approved for temperatures down to -35°C and up to +55°C
- Materials: marine grade aluminum and stainless steel with salt-resistant powder coat finish
- Lower power consumption: LED's consume 75% or more less power than Halogen lamps
- Longer life: LED's last tens-of-thousands of hours compared to approximately 250 to 750 hours depending upon the Halogen lamp. This reduces lamp replacement costs, increases reliability

CE | IP66 | RoHS | -35~+55 | AC220V | 30.000H | 3 Year WARRANTY

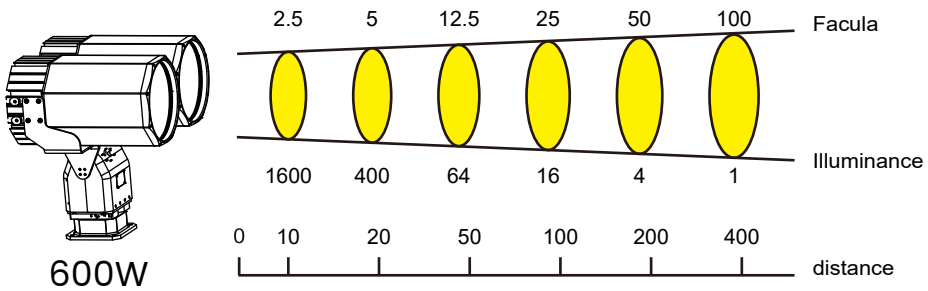

Applications

- National defense
- Marine
- Military
- Water conservation
- Expedition and oil field
- Wharf
- Large surface warship
- Maritime search and rescue

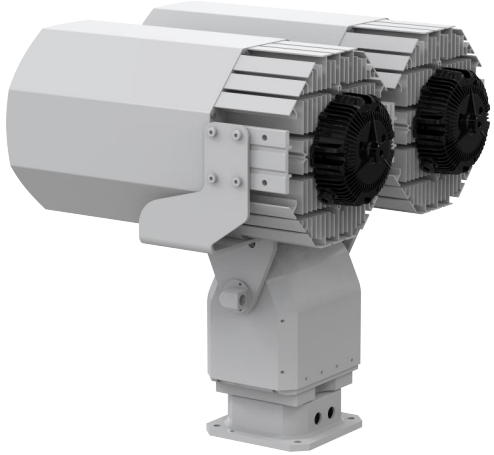

Cloud Platform

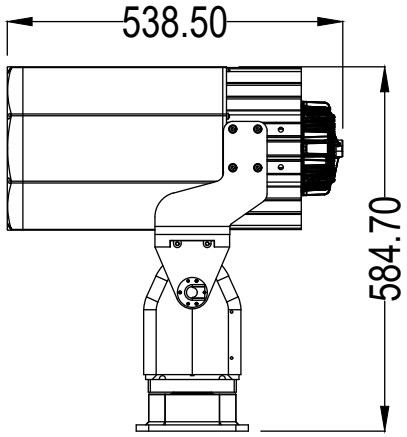

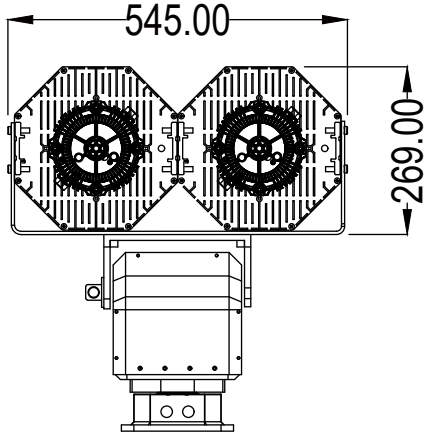

Specifications

Model		TBSL-H3-600W		
Light Information	Light Source	LED		
	Power Consumption	600W		
	Color Temperature	6000K		
	Input Voltage	AC100~277 V 50/60HZ		
	Working Temperature	-35℃～+55℃		
	IP Rating	IP66		
	Lifespan	>30,000 hours		
	Beam Angle	15°		
	Beam Distance	≥400m (1LUX)		
	Housing Material	1070 Pure aluminum cold forging, with Salt-resistant, Scratch-resistant White Powder Coat Finish		
	Weight	60kg		
Lux	Lux Level	Facula	ILLuminance	Distance
		2.5m	1600	10
		5.0m	400	20
		12.5m	64	50
		25m	16	100
		50m	4	200
		100m	1	400
Cloud Platform (Optional)	Adjustable Speed	Horizontal:0.1°~ 9°/S; vertical 0.1 ~6°/S;		
	Adjustable Angle	Horizontal: 0~180°or 0~360°; vertical +30°~-30°; or custeomizable		
	Preset Position	200 pcs		
	Repeated Positioning Accuracy	±0.2°		
	Communication Protocol	Pelco-D, Pelco-P for option		
	Communication Baud Bate	2400/4800/9600/19200 bps for option		
	Communication Interface	RS485/ RS422		

LED Street Light

Tool-Free Install LED Street Light S7

PAGE 99-100

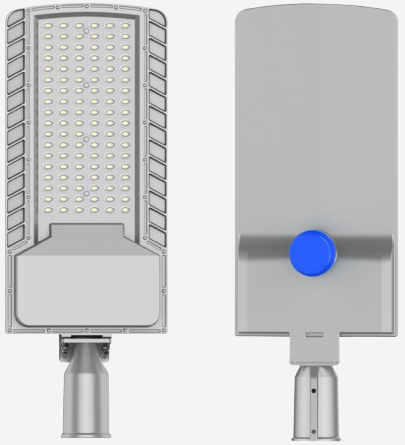

ECO Series LED Street Light S10

PAGE 101-102

TUBU

Tool-Free Install LED Street Light S7

Features

- Patent private mold, integrated die-casting aluminium
- High light efficiency, 130Lm/W / 150Lm/W / 170Lm/W available
- Professional PC anti-glare lens: lens angle 60° / 90° / 120° / T2M / T3M / T4M
- 0-10V dimming, time control, light sensing, internet of things control and other functions are optional
- Flat honeycomb design, good heat dissipation
- Horizontal locator for easy installation
- The protection level reaches IP66
- Tempered glass panel, fixed without glue

CE RoHS CB

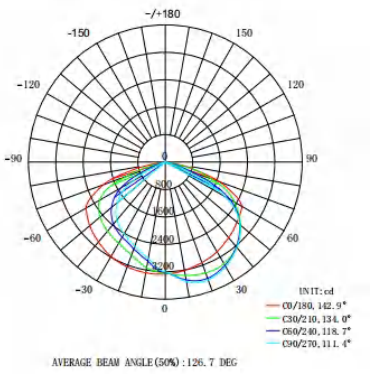

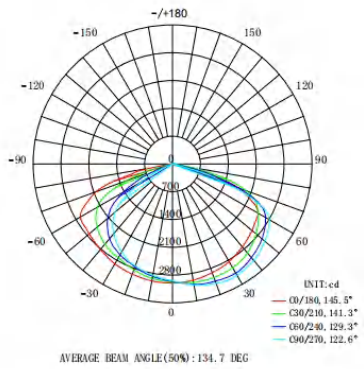

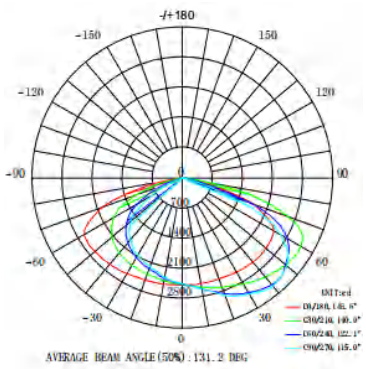

Applications

- Main road
- High way
- Flyover
- City street
- Residential district
- Industrial
- Overpass
- Sidewalk
- Square
- School
- Park

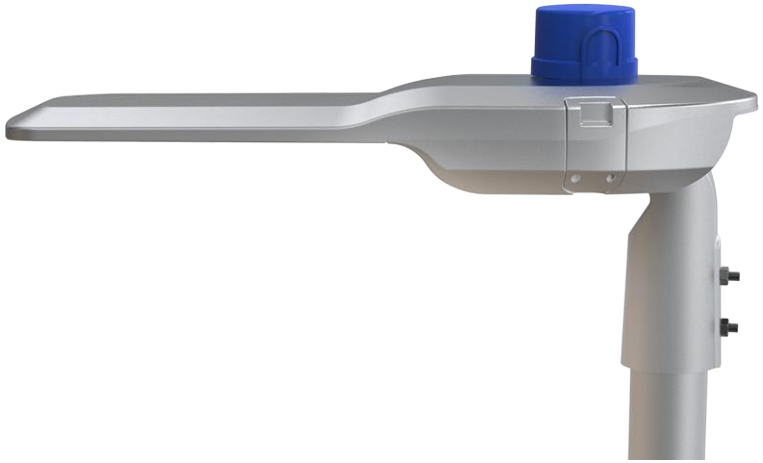

Installation hole size: 60mm

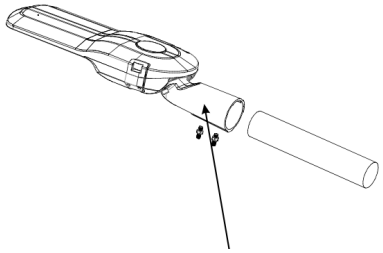

42/50/60mm hole size is available

Installation hole size: 60mm

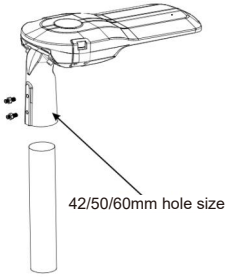

42/50/60mm hole size is available

Installation hole size: 60mm

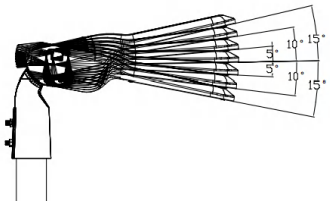

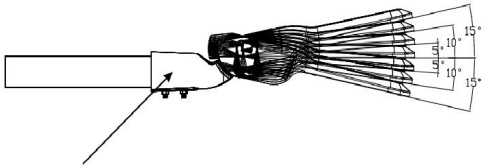

42/50/60mm hole size is available

Specifications

Product Code	RL-S7-25W	RL-S7-50W	RL-S7-60W	RL-S7-80W	RL-S7-100W	RL-S7-120W
Power	25W	50W	60W	80W	100W	120W
LED Type	Lumileds 5050					
Voltage	AC100V-240V (50/60Hz)					
LED Quantity	48pcs	48pcs	48pcs	72pcs	72pcs	72pcs
Luminous Flux	4500Lm	8700Lm	10200Lm	14000Lm	17500Lm	20400Lm
Warm White	3000-4000K					
Neutral White	4000-5000K					
Cool White	5000-6000K					
Beam Angle	60° / 90° / 120° / T2M / T3M / T4M					
CRI	Ra>70					
Driver Efficiency	>88%					
Luminous Efficiency	170-180Lm/W					
PF	>0.95					
THD	≤15%					
IP Rank	IP66					
Lamp Size (mm)	568*200*109	568*200*109	568*200*109	613*240*109	613*240*109	613*240*109
Net Weight	4kg	4kg	4kg	4.92kg	4.92kg	4.92kg
Certificate	CE, CB, RoHS					

Product Code	RL-S7-150W	RL-S7-180W	RL-S7-200W	RL-S7-250W	RL-S7-300W
Power	150W	180W	200W	250W	300W
LED Type	Lumileds 5050				
Voltage	AC100V-240V (50/60Hz)				
LED Quantity	96pcs	96pcs	128pcs	128pcs	192pcs
Luminous Flux	26250Lm	30600Lm	35000Lm	42000Lm	51000Lm
Warm White	3000-4000K				
Neutral White	4000-5000K				
Cool White	5000-6000K				
Beam Angle	60° / 90° / 120° / T2M / T3M / T4M				
CRI	Ra>70				
Driver Efficiency	>88%				
Luminous Efficiency	170-180Lm/W				
PF	>0.95				
THD	≤15%				
IP Rank	IP66				
Lamp Size (mm)	683*260*130	683*260*130	693*300*130	693*300*130	793*300*130
Net Weight	5.86KG	5.86KG	6.47KG	6.47KG	7.7KG
Certificate	CE, CB, RoHS				

TUBU

ECO Series LED Street Light S10

Features

- Patent private mold, integrated die-casting aluminium
- High efficiency, 180Lm/W
- Use professional anti-glare full cut-off light distribution: T2
- 0-10V dimming / time control / light sensor / IOT control available
- Flat honeycomb design, good heat dissipation
- Angle of mounting adapter can be installed and adjusted 90° / 180° (±15°)
- The protection level reaches IP67

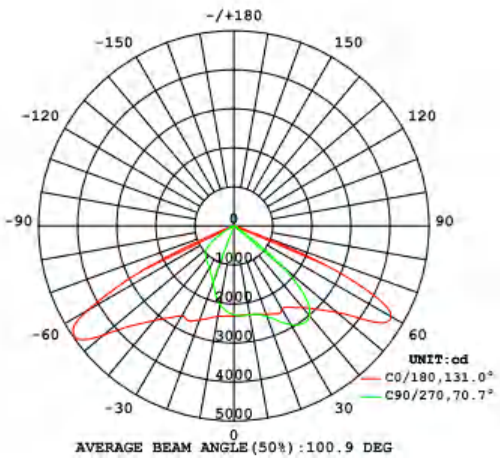

Applications

- Main road
- High way
- Flyover
- City street
- Residential district
- Industrial
- Overpass
- Sidewalk
- Square
- School
- Park

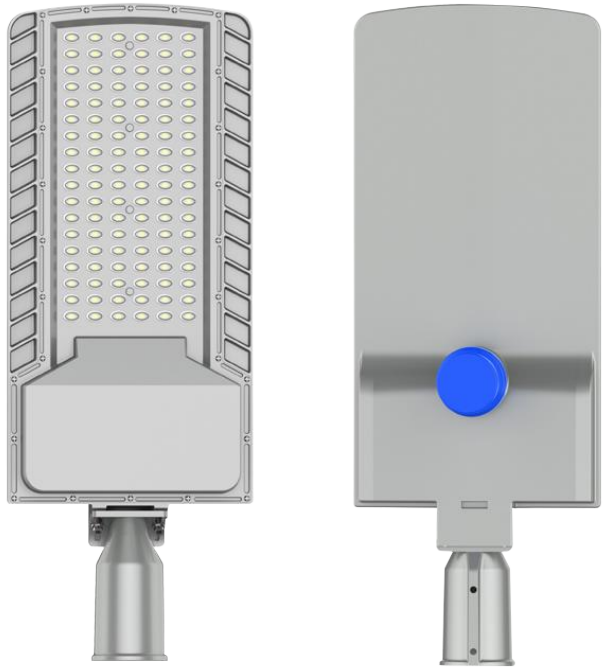

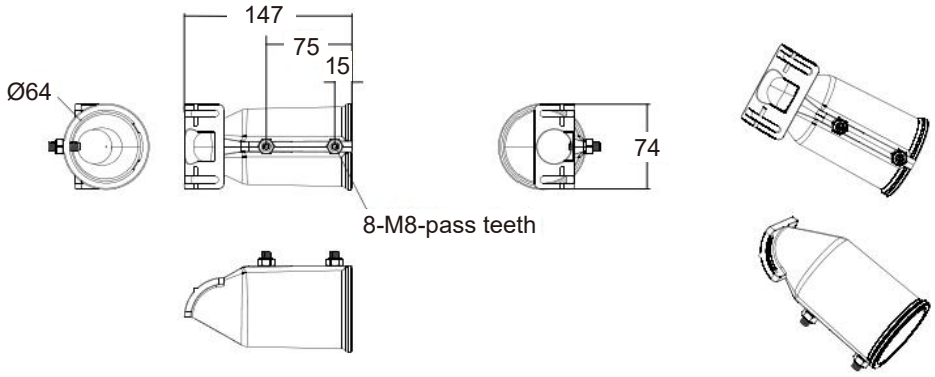

60mm mounting holes

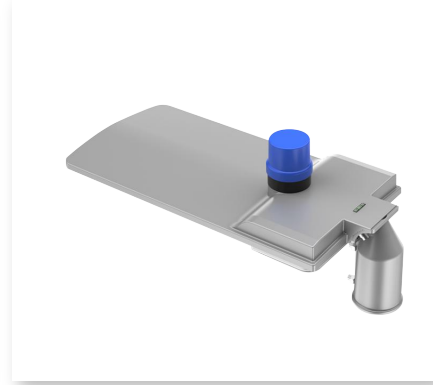

Specifications

Product Code	RL-S10-30W	RL-S10-50W	RL-S10-100W	RL-S10-150W	RL-S10-200W
Power	20-40W	50-70W	80-120W	150-180W	200-240W
LED Type	EMC 5050				
Voltage	AC100V-277V (50/60Hz)				
LED Quantity	24pcs	32pcs	72pcs	108pcs	144pcs
Luminous Flux	3600-7200Lm	9000-12600Lm	14400-21600Lm	27000-32400Lm	36000-43200Lm
Warm White	2700-3500K				
Neutral White	4000-4500K				
Cool White	5000-6000K				
Beam Angle	T2				
CRI	Ra>70				
Driver Efficiency	>90%				
Luminous Efficiency	180lm/W				
PF	>0.95				
THD	≤15%				
IP Rank	IP67				
Lamp Size (mm)	438*108*75	467*175*75	564*221*75	647*241*75	740*276*75
Net Weight	1.15kg	1.54kg	1.89kg	2.21kg	2.50kg
Certificate	CE, CB, RoHS				

TUBU

Industrial and Agricultural LED Lighting Expert

ADD

Building A
Hankun Hi-tech Industrial Zone
Longteng Road
Longgang Shenzhen

TEL

+ 86-755-8461-5006

Email

sales@tu-bu.com

WhatsApp

+ 86-186-0300-1019

Website

www.tu-bu.com